RESIDENTIAL ADDITION

4

RECEIVED
6.25.26
CITY OF BURLINGAME
CDD-PLANNING DIVISION

1611 WILLOW AVE
BURLINGAME, CA 94010

SHEET INDEX

A0.0 - COVER SHEET
A0.1 - EXISTING SITE PLAN
A0.2 - PROPOSED SITE PLAN
A0.3 - T-24 REPORT
A0.4 - T-24 REPORT
A0.5 - GREEN CHECKLIST
A1.0 - EXISTING LOWER LEVEL FLOOR PLAN
A1.1 - EXISTING MAIN LEVEL FLOOR PLAN
A1.2 - PROPOSED MAIN LEVEL FLOOR PLAN
A1.3 - PROPOSED LOWER LEVEL FLOOR PLAN
A1.4 - PROPOSED ROOF PLAN
A1.5 - PROPOSED LANDSCAPE, IRRIGATION PLANS AND CALCS
A1.6 - TREE PROTECTION PLAN
A2.0 - ELEVATIONS
A2.1 - ELEVATIONS
A2.2 - ELEVATIONS
A3.0 - EXISTING SECTIONS
A3.1 - PROPOSED SECTIONS
A3.2 - PROPOSED RENDERS
A4.0 - WINDOW AND DOOR SCHEDULE
A5.0 - FIRE PLACE DETAILS
A5.1 - FIRE PLACE DETAILS

GENERAL NOTES

29. ADHESIVES, SEALANTS, AND CAULKS USED ON THE PROJECT SHALL FOLLOW LOCAL AND REGIONAL AIR POLLUTION OR AIR QUALITY MANAGEMENT DISTRICT STANDARDS.

30. PAINT AND COATINGS WILL COMPLY WITH VOC LIMITS.

31. AEROSOL PAINTS AND COATINGS WILL MEET THE PRODUCT-WEIGHTED MIR LIMITS FOR ROC, AND COMPLY WITH PERCENT VOC BY WEIGHT OF PRODUCT LIMITS, REGULATION 8, RULE 49.

32. DOCUMENTATION SHALL VERIFY COMPLIANCE FOR VOC FINISH MATERIALS.

33. CARPET SYSTEMS WILL MEET CALGREEN TESTING AND PRODUCT REQUIREMENTS.

34. WHERE RESILIENT FLOORING IS INSTALLED, AT LEAST 80% OF THE FLOOR AREA RECEIVING RESILIENT FLOORING WILL COMPLY WITH THE CALIFORNIA GREEN BUILDING CODE REQUIREMENTS.

35. HARDWOOD PLYWOOD, PARTICLEBOARD, AND MEDIUM DENSITY FIBERBOARD COMPOSITE WOOD PRODUCTS SHALL COMPLY WITH THE LOW FORMALDEHYDE EMISSION STANDARDS.

36. BUILDING MATERIALS WITH VISIBLE SIGNS OF WATER DAMAGE WILL NOT BE INSTALLED. WALL AND FLOOR FRAMING WILL NOT BE ENCLOSED WHEN THE FRAMING MEMBERS EXCEED 19% MOISTURE CONTENT. MOISTURE CONTENT WILL BE VERIFIED PRIOR TO FINISH MATERIAL BEING APPLIED. REPLACE WET INSULATION PRODUCTS, OR ALLOW TO DRY BEFORE ENCLOSURE.

37. UPON REQUEST, VERIFICATION OF COMPLIANCE WITH THIS CODE MAY INCLUDE CONSTRUCTION DOCUMENTS, PLANS, SPECIFICATIONS, BUILDER OR INSTALLER CERTIFICATION, INSPECTION REPORTS, OR OTHER METHODS ACCEPTABLE TO THE BUILDING DIVISION THAT WILL SHOW SUBSTANTIAL CONFORMANCE WITH THE 2022 CODE REQUIREMENTS.

PROJECT DIRECTORY

PROJECT ADDRESS:

1611 WILLOW AVE
BURLINGAME, CA 94010

OWNER:

VEENA DUBAL
J RYAN GILFOIL

ARCHITECT:

APPARATUS ARCHITECTURE
STUART DAVID HILLS
LICENSE NO. C24966
4450 18TH STREET
SAN FRANCISCO, CA 94114
(415) 703-0904

STRUCTURAL ENGINEER:

SEMCO ENGINEERING, INC.
SHAUN MOYNIHAN
322 CORTLAND AVENUE
SAN FRANCISCO, CA 94110
(415) 553-8810

PROJECT INFO

SCOPE OF WORK:

SECOND FLOOR REAR ADDITION REPLACING EXISTING TRELLIS OVER EXISTING PATIO. LOWER FLOOR CONVERSION OF UNCONDITIONED BASEMENT SPACE TO CONDITIONED USE WITH LEGAL HEAD HEIGHT.

PARCEL NUMBER:
028142350

DWELLING UNITS
1

ZONING:
R-1

OCCUPANCY / CONSTRUCTION TYPE:
R-3/U - TYPE VB

BUILDING SPRINKLER:
PROVIDE FIRE SPRINKLER SYSTEM THROUGHOUT ENTIRE STRUCTURE (NOT JUST ADDITION)

STORIES: MULTILEVEL HOME

EXISTING SQUARE FOOTAGE:

(E) UPPER LEVEL	2,051 SQFT
(E) LOWER LEVEL	597 SQFT
(E) GARAGE	182 SQFT
TOTAL	2,830 SQFT

PROPOSED SQUARE FOOTAGE:

(N) UPPER LEVEL	2,311.1 SQFT
(N) LOWER LEVEL	1,300.6 SQFT
(E) GARAGE	182 SQFT
TOTAL	3,793.7 SQFT

PARCEL SIZE:	0.1802 ACRE 7,850 SQFT
ALLOW LOT COVERAGE (40%):	3,140 SQFT
EXISTING LOT COVERAGE:	2,420 SQFT
PROPOSED LOT COVERAGE:	**2,729 SQFT**
ALLOW FAR:	7,850 SQFT x 32% + 1,100 SQFT 3,612 SQFT
PROPOSED FAR:	**3,609 SQFT**

GENERAL NOTES

1. PLANS SHALL COMPLY WITH TITLE-24 ENERGY EFFICIENCY REQUIREMENTS AND ALL MANDATORY MEASURES.

2. ALL CONSTRUCTION, REGARDLESS OF DETAILS ON PLANS, SHALL COMPLY WITH:
- 2022 CALIFORNIA BUILDING CODE
- 2022 CALIFORNIA PLUMBING CODE
- 2022 CALIFORNIA MECHANICAL CODE
- 2022 CALIFORNIA ELECTRICAL CODE
- 2022 CALIFORNIA BUILDING ENERGY STANDARDS
- 2022 CALIFORNIA FIRE CODE
- BURLINGAME MUNICIPAL CODES
- ONE AND TWO FAMILY DWELLINGS MAY BE DESIGNED TO THE 2016 CALIFORNIA RESIDENTIAL CODE.

3. 100% OF MIXED DEBRIS MUST BE TRANSPORTED BY A REGISTERED HAULER TO A REGISTERED FACILITY AND BE PROCESSED FOR RECYCLING.

4. PROVIDE ADEQUATE SPACE AND EQUAL ACCESS FOR STORAGE, COLLECTION, AND LOADING OF COMPOSTABLE, RECYCLABLE, AND LANDFILL MATERIALS. - SEE ADMINISTRATIVE BULLETIN 088.

5. CONSTRUCTION PLANS SHALL INDICATE HOW THE SITE GRADING OR DRAINAGE SYSTEM WILL MANAGE SURFACE WATER FLOWS TO KEEP WATER FROM ENTERING THE BUILDING, SUCH AS SWALES, DRAINS, OR WATER RETENTION GARDENS. (CALGREEN 4.106.3)

7. AUTOMATICALLY ADJUST IRRIGATION BASED ON WEATHER AND SOIL MOISTURE. CONTROLLERS MUST HAVE EITHER AN INTEGRAL OR SEPARATE RAIN SENSORS THAT CONNECTS OR COMMUNICATES WITH THE CONTROLLER.

8. INSTALL WATER-EFFICIENT FIXTURES & FITTINGS AS SUMMARIZED IN CALGREEN 4.303 (SEE PRESCRIPTIVE APPROACH TO INDOOR WATER USE ON SHEET A1C).

9. COMPLY WITH CALIFORNIA ENERGY CODE (TITLE 24, PART 6).

10. ANNULAR SPACES AROUND PIPES, ELECTRIC CABLES, CONDUITS, OR OTHER OPENINGS IN SOLE/BOTTOM PLATES AT EXTERIOR WALLS SHALL BE CLOSED WITH CEMENT MORTAR, CONCRETE MASONRY, OR A SIMILAR METHOD ACCEPTABLE TO DBI FOR PROTECTION AGAINST RODENTS.

11. VERIFY WALL AND FLOOR FRAMING DOES NOT EXCEED 19% MOISTURE CONTENT PRIOR TO ENCLOSURE. MATERIALS WITH VISIBLE SIGNS OF MOISTURE DAMAGE SHALL NOT BE INSTALLED. MOISTURE CONTENT SHALL BE VERIFIED IN COMPLIANCE WITH CALGREEEN 4.505.3 (SEE REQUIREMENTS ON SHEET X).

12. CONCRETE SLAB ON GRADE FOUNDATIONS REQUIRED TO HAVE A VAPOR RETARDER MUST ALSO HAVE A CAPLILLARY BREAK, IN COMPLIANCE WITH CALGREEN 4.505.2 (SEE REQUIREMENTS ON SHEET X).

13. INSTALL ONLY DIRECT-VENT OR SEALED-COMBUSTION APPLIANCES; COMPLY WITH US EPA PHASE II LIMITS. (CALGREEN 4.503.1)

14. DESIGN & INSTALL HVAC SYSTEMS TO ACCA MANUAL J, D, & S (CALGREEN 4.507.2)

15. HVAC SYSTEM INSTALLERS MUST BE TRAINED & CERTIFIED IN THE PROPER INSTALLATION OF HVAC SYSTEMS, SUCH AS VIA A STATE CERTIFIED APPRENTICESHIP PROGRAM, PUBLIC UTILITY TRAINING PROGRAM (W/CERTIFICATION AS INSTALLER QUALIFICATION), OR OTHER PROGRAM ACCEPTABLE TO DBI (CALGREEN 702.1).

16. DUCT OPENINGS AND OTHER AIR DISTRIBUTION COMPONENT OPENINGS SHALL BE COVERED DURING ALL PHASES OF CONSTRUCTION WITH TAPE, PLASTIC, SHEETMETAL, OR OTHER ACCEPTABLE METHODS TO REDUCE THE AMOUNT OF WATER, DUST, & DEBRIS ENTERING THE SYSTEM.

17. BATHROOM EXHAUST FANS MUST BE ENERGY STAR COMPLIANT, DUCTED TO TERMINATE OUTSIDE THE BUILDING, & CONTROLLED BY HUMIDISTAT CAPABLE OF ADJUSTMENT BETWEEN RELATIVE HUMIDITY OF LESS THAN 50% TO MAXIMUM 80%. HUMIDITY CONTROL MAY BE A SEPARATE COMPONENT FROM THE EXHAUST FAN.

18. ALL CARPET MUST MEET ONE OF THE STANDARDS SET FORTH IN CALGREEN 4.504.3 (SEE REQUIREMENTS ON SHEET X).

19. FOR 80% OF FLOOR AREA RECEIVING RESILIENT FLOORING, INSTALL RESILIENT FLOORING COMPLYING WITH ONE OF THE REQUIREMENTS SET FORTH ON SHEET X.

20. HARDWOOD PLYWOOD, PARTICLEBOARD, & MEDIUM DENSITY FIBERBOARD COMPOSITE WOOD PRODUCTS USED ON INTERIOR OR EXTERIOR SHALL MEET CARB AIR TOXICS CONTROL MEASURE FOR COMPOSITE WOOD. SEE CALGREEN TABLE 4.504.5.

21. INTERIOR PAINTS & COATINGS SHALL COMPLY WITH VOC LIMITS IN THE SIR RESOURCES BOARD ARCHITECTURAL COATINGS SUGGESTED CONTROL MEASURE & CALIFORNIA CODE OF REGULATIONS TITLE 17 FOR AEROSOL PAINTS. SEE CALGREEN TABLE 4.504.3.

22. LOW-VOC AEROSOL PAINTS & COATINGS SHALL MEET BAAQMD VOC LIMITS (REGULATION 8, RULE 49) & PRODUCT-WEIGHTED MIR LIMITS FOR ROC (CALGREEN 4.504.2.3).

23. LOW-VOC CAULKS, CONSTRUCTION ADHESIVES, & SEALANTS SHALL MEET SCAQMD RULE 1168. SEE CALGREEN TABLES 4.504.1 & 4.504.2.

24. WET AND DAMP LOCATIONS. LUMINAIRES INSTALLED IN WET OR DAMP LOCATIONS SHALL BE INSTALLED SUCH THAT WATER CANNOT ENTER OR ACCUMULATE IN WIRING COMPARTMENTS, LAMPHOLDERS, OR OTHER ELECTRICAL PARTS. ALL LUMINAIRES INSTALLED IN WET LOCATIONS SHALL BE MARKED, "SUITABLE FOR WET LOCATIONS." ALL LUMINAIRES INSTALLED IN DAMP LOCATIONS SHALL BE MARKED "SUITABLE FOR WET LOCATIONS" OR "SUITABLE FOR DAMP LOCATIONS

25. IN BATHROOMS, GARAGES, LAUNDRY ROOMS, AND UTILITY ROOMS, AT LEAST ONE LUMINAIRE IN EACH OF THESE SPACES SHALL BE CONTROLLED BY AN OCCUPANT OR VACANCY SENSOR PROVIDING AUTOMATIC-OFF FUNCTIONALITY. IF AN OCCUPANT SENSOR IS INSTALLED, IT SHALL BE INITIALLY CONFIGURED TO MANUAL-ON OPERATION USING THE MANUAL CONTROL REQUIRED UNDER SECTION 150.0(K)2C.

26. OUTDOOR LIGHTING MUST MEET 2 OF THE 3 REQUIREMENTS LISTED BELOW. PROVIDE 2 OF THE FOLLOWING REQUIREMENTS FOR ALL OUTDOOR LIGHTING. REFER TO CODE SECTION OF THE 2019 CALIFORNIA ENERGY CODE: SUBCHAPTER 7, SECTION 150(K)(3)(A)

I. CONTROLLED BY A MANUAL ON AND OFF SWITCH THAT PERMITS THE AUTOMATIC ACTIONS OF ITEMS II OR III BELOW; AND
II. CONTROLLED BY A PHOTOCELL AND EITHER A MOTION SENSOR OR AN AUTOMATIC TIME SWITCH CONTROL; OR
III. CONTROLLED BY AN ASTRONOMICAL TIME CLOCK CONTROL.

27. ALL SPRAY FOAM INSULATION TO BE CLOSED CELL OR EQUIVALENT

28. PJC (GEOTECH) SHALL OBSERVE ALL GRADING AND EARTHWORKS AND SHALL APPROVE FOUNDATION EXCAVATIONS. PJC SHALL ALSO APPROVE SLAB SUBGRADE AND INSTALLATION OF DRAINAGE FACILITIES PER "GEOTECHNICAL REVIEW OF ARCHITECTURAL AND STRUCTURAL PLANS" 3-15-2023 LETTER. PJC SHALL BE NOTIFIED AT LEAST 48 HOURS IN ADVANCE OF ALL FIELD INSPECTIONS.

ABBREVIATIONS

AB	ANCHOR BOLT	NTS	NOT TO SCALE
ADDL	ADDITIONAL	OC	ON CENTER
ALT	ALTERNATE	OD	OUTSIDE DIAMETER
ARCH	ARCHITECTURAL	OF	OUTSIDE FACE
BLKG	BLOCKING	OPNG	OPENING
BM	BEAM	OPP	OPPOSITE
BN	BOUNDARY NAIL	ORIG	ORIGINAL
BRG	BEARING	PL	PLATE
BTWN	BETWEEN	PLCS	PLACES
BOT	BOTTOM	PLYWD	PLYWOOD
CJ	CONSTRUCTION JOINT	PT	PRESERVATIVE TREATED
CL	CENTER LINE	PW	PLATE WASHER
CLR	CLEAR	R	RADIUS
COL	COLUMN	REF	REFERENCE
CONC	CONCRETE	REINF	REINFORCEMENT
CONN	CONNECTION	REQD	REQUIRED
CONST	CONSTRUCTION	RF	ROOF
CONT	CONTINUOUS	RFT	RAFTERS
DBL	DOUBLE	RW	RETAINING WALL
DF	DOUGLAS FIR/LARCH	SCHED	SCHEDULE
DP	DEEP	SECT	SECTION
DIA	DIAMETER	SEP	SEPARATION
DIM	DIMENSION	SIM	SIMILAR
DWG	DRAWING	SN	SHEAR NAIL
DWL	DOWEL	SPEC	SPECIFICATION
E	EXISTING	SQ	SQUARE
EA	EACH	STD	STANDARD
EF	EACH FACE	STGR	STAGGER
EL	ELEVATION	STIFF	STIFFENERS
ELEC	ELECTRICAL	STR	STRUCTURAL
EMBED	EMBEDMENT	STR I	STRUCTURAL I
EN	EDGE NAIL	T	TOP
EQ	EQUAL OR EQUIVALENT	T&B	TOP & BOTTOM
ES	EACH SIDE	T&G	TONGUE & GROOVE
EW	EACH WAY	THK	THICKNESS/THICK
EXT	EXTERIOR	THR	THREADED
FDN	FOUNDATION	TN	TOENAIL
FF	FINISHED FLOOR	TOP	TOP OF PARAPET
FJ	FLOOR JOIST	TOW	TOP OF WALL
FOC	FACE OF CONCRETE	TYP	TYPICAL
FOM	FACE OF MASONRY	UBC	UNIFORM BUILDING CODE
FOS	FACE OF STUD	UON	UNLESS OTHERWISE NOTED
FOF	FACE OF FINISH	V	VERTICAL
FRMG	FRAMING	VERT	VERTICAL
FRT	FIRE-RETARDANT TREATED	VIF	VERIFY IN FIELD
FS	FAR SIDE	VSH	VERTICAL SLOTTED HOLES
FTG	FOOTING	WD	WOOD
GA	GAUGE	WP	WATERPROOF
GALV	GALVANIZED	WT	WEIGHT
GLULAM	GLUED LAMINATED BEAM	WWF	WELDED WIRE FABRIC
GR	GRADE	W/	WITH
H	HORIZONTAL	W/O	WITH OUT
HDR	HEADER		
HGR	HANGER		
HT	HEIGHT		
HORIZ	HORIZONTAL		
IF	INSIDE FACE		
I JST	I-JOIST		
INT	INTERIOR		
JST	JOIST		
JT	JOINT		
LDGR	LEDGER		
LTWT	LIGHT WEIGHT		
MATL	MATERIAL		
MAX	MAXIMUM		
MB	MACHINE BOLT		
MECH	MECHANICAL		
MFR	MANUFACTURER		
MIN	MINIMUM		
MISC	MISCELLANEOUS		
MTL	METAL		
NIC	NOT IN CONTRACT		
NO	NUMBER		
NS	NEAR SIDE		

PARCEL MAP

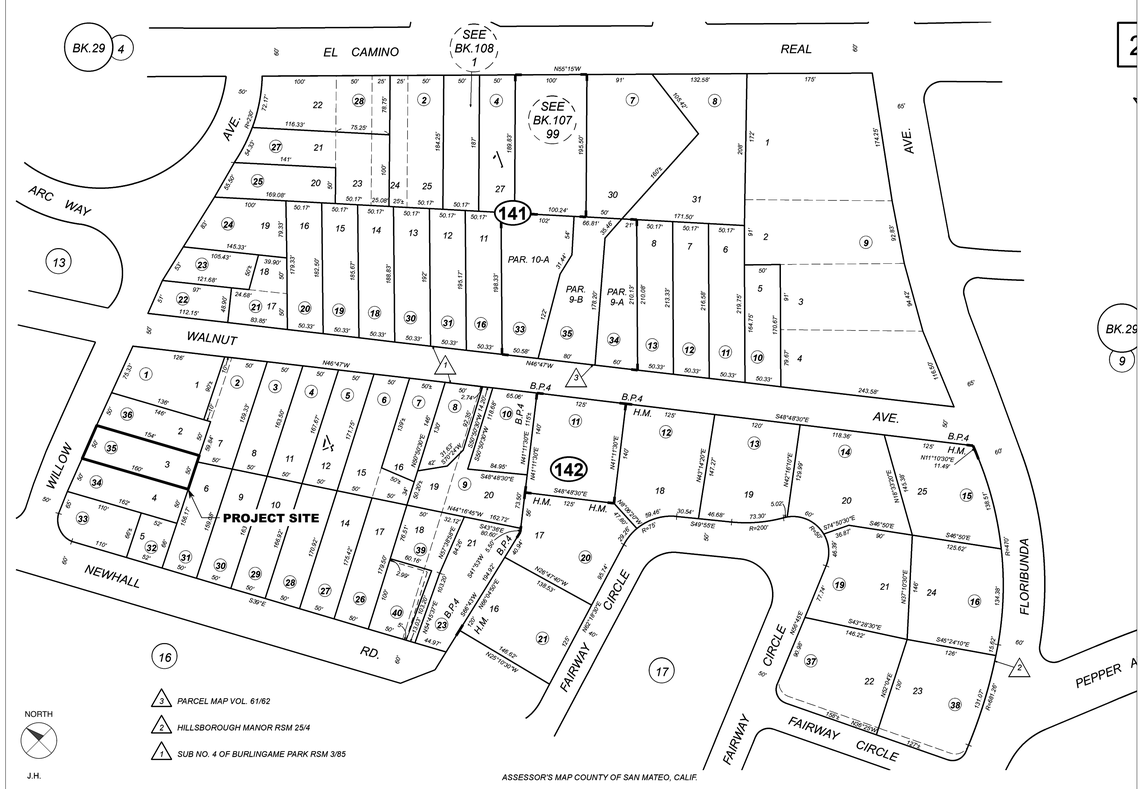

t: (415) 703-0904
e: info@apparatus.com

4450 18th Street
San Francisco, CA 94114

APPARATUS ARCHITECTURE

LICENSED ARCHITECT
STUART D. HILLS
No. C24966
Renew 9-30-2027
STATE OF CALIFORNIA

RESIDENTIAL ADDITION
1611 WILLOW AVE
BURLINGAME, CA 94010
PARCEL NUMBER 028142350

OWNER:
VEENA DUBAL
J RYAN GILFOIL

date	NOV 17, 2025
scale	AS NOTED
revis	
2	REVISION JUN 01, 2026
3	REVISION JUN 18, 2026
4	REVISION JUN 18, 2026

A0.0

NOTE: NO TREES ARE TO BE REMOVED

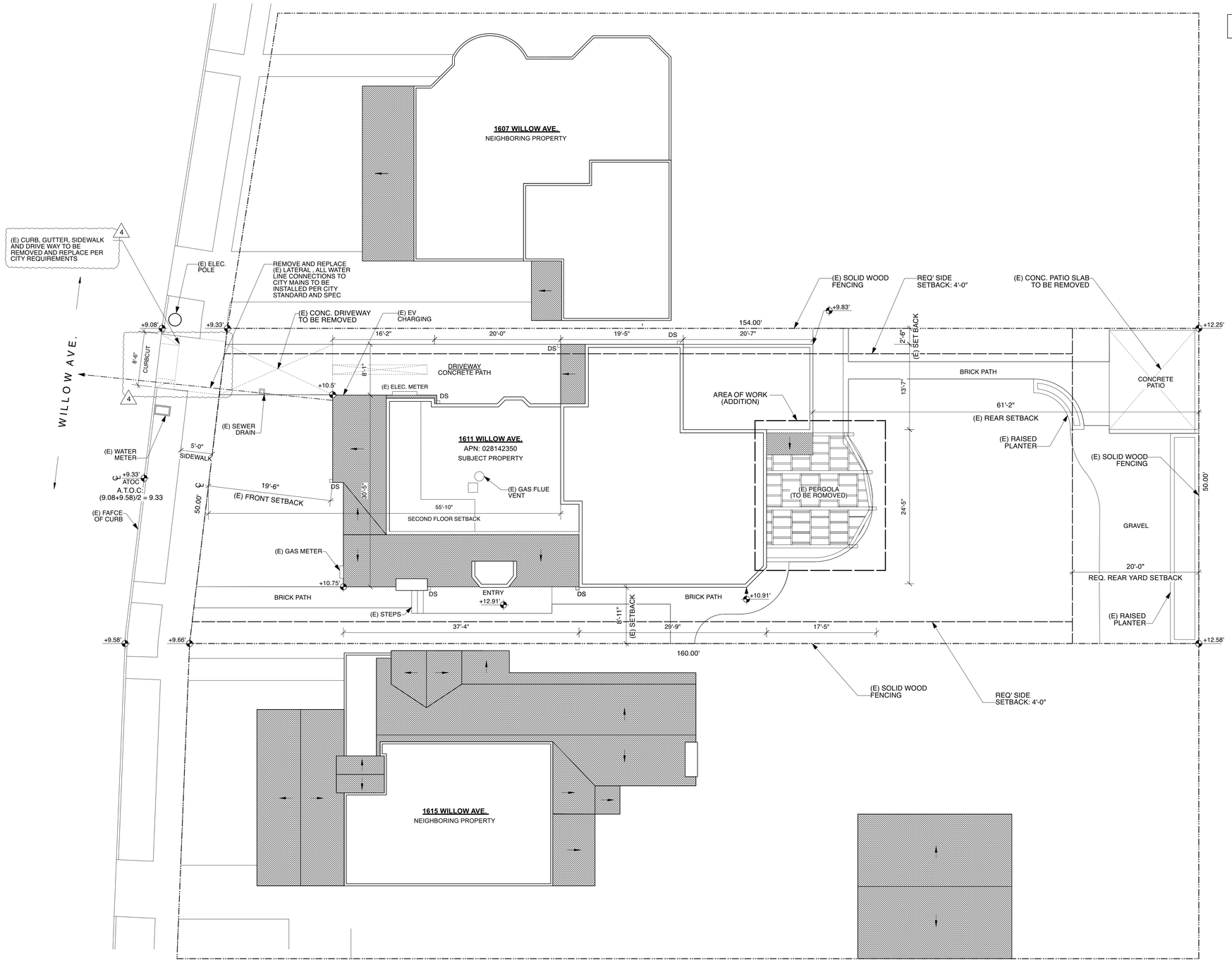

NORTH

EXISTING SITE PLAN

APPARATUS ARCHITECTURE
4459 19th Street
San Francisco, CA 94114
t: (415) 703-9594
e: info@apparatus.com

LICENSED ARCHITECT
STUART D. HILLS
No. C24966
Renew. 9-30-2027
STATE OF CALIFORNIA

RESIDENTIAL ADDITION

OWNER:
VEENA DUBAL
J RYAN GILFOIL

1611 WILLOW AVE

BURLINGAME, CA 94010
PARCEL NUMBER 028142350

date	NOV 17, 2025
scale	1/8" = 1'-0"
revis	02-11-205
2	REVISION JUN 01, 2026
3	REVISION JUN 18, 2026
4	REVISION JUN 18, 2026

A0.1

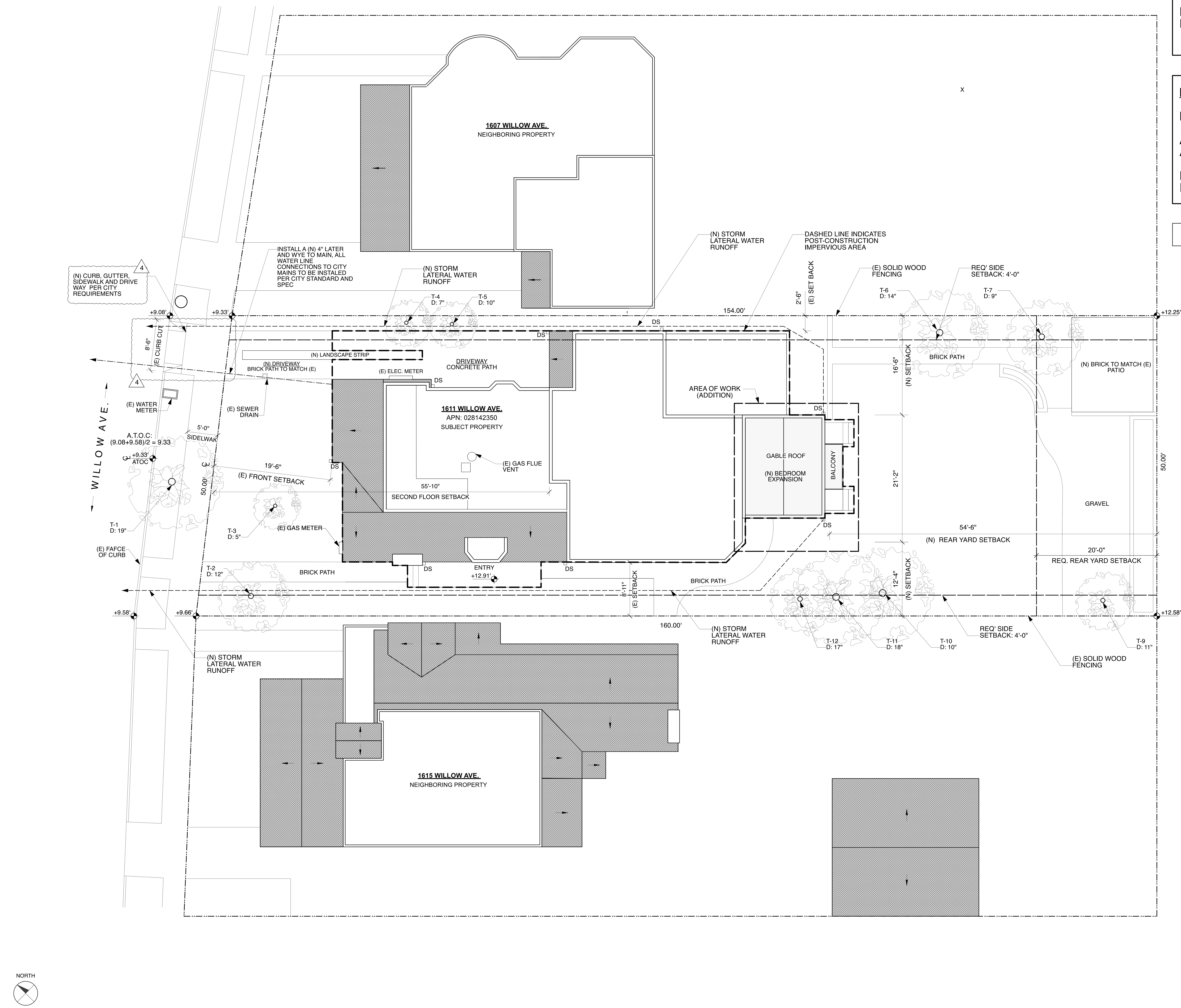

PROPOSED SITE PLAN

NOTE

PROVIDE FIRE SPRINKLER SYSTEM THROUGHOUT ENTIRE STRUCTURE

IMPERVIOUS AREA CALCULATION

LOT SIZE:	7,850 SF	=	100%
ALLOWED IMPERVIOUS AREA:	3,140 SF	=	40%
POST-CONSTRUCTION IMPERVIOUS SF:	3,082 SF	=	39.26%

NOTE: NO TREES ARE TO BE REMOVED

TREE INVENTORY & ASSESSMENT TABLE

*TRUNK DIAMETERS OF OFFSITE TREES ARE VISUAL ESTIMATES

Tree #	Protected	Preserve/ Remove	Species (Common / Latin)	Trunk Diameter (in.)	Health	Structure	Qualifies as Required Landscape Tree
1	Yes/ Street	Preserve	Southern magnolia (Magnolia grandiflora)	18	Fair	Fair	
2	No	Preserve	Chinese saucer magnolia (Magnolia × soulangeana)	12.5	Good	Fair	Yes
3	No	Preserve	Red horse chestnut (Aesculus × carnea)	4	Good	Good	
4	No	Preserve	Pittosporum (Pittosporum undulatum)	6	Fair	Good	Yes
5	No	Preserve	Pineapple guava (Acca sellowiana)	10	Poor	Fair	
6	Yes	Preserve	Carolina cherry laurel (Prunus caroliniana)	14.8	Fair	Fair	Yes
7	No	Preserve	Loquat (Eriobotrya japonica)	8.5	Poor	Poor	
9	No	Preserve	Prunus sp.	8	Fair	Fair	
10	No	Preserve	Carolina cherry laurel (Prunus caroliniana)	7.5	Fair	Poor	Yes
11	No	Preserve	Chinese elm (Ulmus parvifolia)	12.7	Good	Fair	Yes
12	No	Preserve	Chinese elm (Ulmus parvifolia)	13.2	Good	Fair	Yes

APPARATUS ARCHITECTURE

LICENSED ARCHITECT STUART D. HILLS No. C24966 Renew. 9-30-2027 STATE OF CALIFORNIA

RESIDENTIAL ADDITION

1611 WILLOW AVE
BURLINGAME, CA 94010
PARCEL NUMBER 028142350

OWNER:
VEENA DUBAL
J RYAN GILFOIL

date	NOV 17, 2025
scale	1/8" = 1'-0"
revis	
2	REVISION JUN 01, 2026
3	REVISION JUN 18, 2026
4	REVISION JUN 18, 2026

A0.2

GENERAL INFORMATION					
01	Project Name	Dubal Gilfoil Res (E+A)			
02	Run Title	Title 24 Analysis			
03	Project Location	1611 Willow Ave			
04	City	Burlingame	05	Standards Version	2022
06	Zip code	94010	07	Software Version	EnergyPro 9.2
08	Climate Zone	3	09	Front Orientation (deg/ Cardinal)	225
10	Building Type	Single family	11	Number of Dwelling Units	1
12	Project Scope	Addition and/or Alteration	13	Number of Bedrooms	3
14	Addition Cond. Floor Area (ft^2)	775	15	Number of Stories	2
16	Existing Cond. Floor Area (ft^2)	2648	17	Fenestration Average U-factor	0.3
18	Total Cond. Floor Area (ft^2)	3423	19	Glazing Percentage (%)	19.02%
20	ADU Bedroom Count	n/a	21	ADU Conditioned Floor Area	n/a
22	Fuel Type	Natural gas	23	No Dwelling Unit:	No

COMPLIANCE RESULTS	
01	Building Complies with Computer Performance
02	This building incorporates features that require field testing and/or verification by a certified HERS rater under the supervision of a CEC-approved HERS provider.
03	This building incorporates one or more Special Features shown below

ENERGY USE SUMMARY

Energy Use	Standard Design Source Energy (EDR1) (kBtu/ft^2 -yr)	Standard Design TDV Energy (EDR2) (kTDV/ft^2 -yr)	Proposed Design Source Energy (EDR1) (kBtu/ft^2 -yr)	Proposed Design TDV Energy (EDR2) (kTDV/ft^2 -yr)	Compliance Margin (EDR1)	Compliance Margin (EDR2)
Space Heating	0	20.2	0	19.06	0	1.14
Space Cooling	0	7.81	0	7.97	0	-0.16
IAQ Ventilation	0	0	0	0	0	0
Water Heating	0	18.58	0	18.58	0	0
Self Utilization/Flexibility Credit						
Efficiency Compliance Total	**0**	**46.59**	**0**	**45.61**	**0**	**0.98**
Photovoltaics		0		0		
Battery				0		
Flexibility						
Indoor Lighting	0	7	0	7		
Appl. & Cooking	0	12.03	0	12.05		
Plug Loads	0	16.91	0	16.91		
Outdoor Lighting	0	1.73	0	1.73		
TOTAL COMPLIANCE	**0**	**84.26**	**0**	**83.3**		

NOTICE: This document has been generated by California Home Energy Efficiency Rating Services (CHEERS) using information uploaded by third parties not affiliated with or related to CHEERS. Therefore, CHEERS is not responsible for, and cannot guarantee, the accuracy or completeness of the information contained in this document.

ENERGY USE INTENSITY

	Standard Design (kBtu/ft^2 - yr)	Proposed Design (kBtu/ft^2 - yr)	Compliance Margin (kBtu/ft^2 - yr)	Margin Percentage
Gross EUI[1]	12.88	12.77	0.11	0.85
Net EUI[2]	12.88	12.77	0.11	0.85

Notes
1. Gross EUI is Energy Use Total (not including PV) / Total Building Area.
2. Net EUI is Energy Use Total (including PV) / Total Building Area.

REQUIRED SPECIAL FEATURES

The following are features that must be installed as condition for meeting the modeled energy performance for this computer analysis.

- Ducts in crawl space

HERS FEATURE SUMMARY

The following is a summary of the features that must be field-verified by a certified HERS Rater as a condition for meeting the modeled energy performance for this computer analysis. Additional detail is provided in the building tables below. Registered CF2Rs and CF3Rs are required to be completed in the HERS Registry

- Minimum Airflow
- Verified Refrigerant Charge
- Fan Efficacy Watts/CFM
- Verified heat pump rated heating capacity
- Duct leakage testing

BUILDING - FEATURES INFORMATION

01	02	03	04	05	06	07
Project Name	Conditioned Floor Area (ft^2)	Number of Dwelling Units	Number of Bedrooms	Number of Zones	Number of Ventilation Cooling Systems	Number of Water Heating Systems
Dubal Gilfoil Res (E+A)	3423	1	3	4	0	1

NOTICE: This document has been generated by California Home Energy Efficiency Rating Services (CHEERS) using information uploaded by third parties not affiliated with or related to CHEERS. Therefore, CHEERS is not responsible for, and cannot guarantee, the accuracy or completeness of the information contained in this document.

ZONE INFORMATION

01	02	03	04	05	06	07
Zone Name	Zone Type	HVAC System Name	Zone Floor Area (ft^2)	Avg. Ceiling Height	Water Heating System 1	Status
Existing Lower Zone	Conditioned	HVAC1	597	8	DHW Sys 1	Existing Unchanged
Addition Lower Zone	Conditioned	HVAC1	469	8	DHW Sys 1	New
Existing Upper Zone	Conditioned	HVAC1	2051	9	DHW Sys 1	Existing Unchanged
Addition Upper Zone	Conditioned	HVAC1	306	9	DHW Sys 1	New

OPAQUE SURFACES

01	02	03	04	05	06	07	08	09	10	11
Name	Zone	Construction	Azimuth	Orientation	Gross Area (ft^2)	Window and Door Area (ft2)	Tilt (deg)	Wall Exceptions	Status	Verified Existing Condition
Front Wall	Existing Lower Zone	Ex No HERS Ver 2x4 Wall	225	Front	180	58	90	none	Existing	No
Back Wall	Existing Lower Zone	Ex No HERS Ver 2x4 Wall	45	Back	180	0	90	none	Existing	No
Right Wall	Existing Lower Zone	Ex No HERS Ver 2x4 Wall	135	Right	342	110	90	none	Existing	No
Front Wall 2	Addition Lower Zone	R-15 Wall	225	Front	108	45	90	Extension	New	n/a
Front Wall 3	Existing Upper Zone	Ex No HERS Ver 2x4 Wall	225	Front	680	74	90	none	Existing	No
Left Wall	Existing Upper Zone	Ex No HERS Ver 2x4 Wall	315	Left	420	107	90	none	Existing	No
Back Wall 2	Existing Upper Zone	Ex No HERS Ver 2x4 Wall	45	Back	680	86	90	none	Existing	No
Right Wall 2	Existing Upper Zone	Ex No HERS Ver 2x4 Wall	135	Right	210	17	90	none	Existing	No
Front Wall 4	Addition Upper Zone	R-15 Wall	225	Front	145	30	90	Extension	New	n/a

OPAQUE SURFACES

01	02	03	04	05	06	07	08	09	10	11
Name	Zone	Construction	Azimuth	Orientation	Gross Area (ft^2)	Window and Door Area (ft2)	Tilt (deg)	Wall Exceptions	Status	Verified Existing Condition
Back Wall 3	Addition Upper Zone	R-15 Wall	45	Back	145	30	90	Extension	New	n/a
Right Wall 3	Addition Upper Zone	R-15 Wall	135	Right	210	94	90	Extension	New	n/a
Wall to	Existing Lower Zone>>__Garage__	Ex No HERS Ver 2x4 Wall1	n/a	n/a	77	0	n/a		Existing	No
Wall to 2	Addition Lower Zone>>Existing Lower Zone	R-0 Wall	n/a	n/a	10	0	n/a		New	n/a
Wall to 3	Addition Lower Zone>>__Garage__	R-15 Wall1	n/a	n/a	180	0	n/a		New	n/a
Wall to Uncond	Addition Lower Zone	R-15 Wall1	n/a	n/a	320	0	n/a		New	n/a
Wall to 4	Addition Upper Zone>>Existing Upper Zone	R-0 Wall	n/a	n/a	10	0	n/a		New	n/a
Floor 4	Addition Upper Zone	R-19 Floor No Crawlspace	n/a	n/a	306	n/a	n/a		New	n/a
Floor 5	Existing Upper Zone	Ex No HERS Ver Floor (Cra	n/a	n/a	1071	n/a	n/a		Existing	No
Floor to	Existing Upper Zone	Ex No HERS Ver Floor (No-	n/a	n/a	329	n/a	n/a		Existing	No
Floor to 2	Existing Upper Zone	Ex No HERS Ver Floor (No-	n/a	n/a	469	n/a	n/a		Existing	No
Floor to 3	Existing Upper Zone	Ex No HERS Ver Floor (No-	n/a	n/a	182	n/a	n/a		Existing	No
Left Wall 2	__Garage__	Garage Wall	315	Left	86	0	90	none	Existing	No
Back Wall 4	__Garage__	Garage Wall	45	Back	171	0	90	none	Existing	No

OPAQUE SURFACES - CATHEDRAL CEILINGS

01	02	03	04	05	06	07	08	09	10	11	12	13	14
Name	Zone	Construction	Azimuth	Orientation	Area (ft^2)	Skylight Area (ft^2)	Roof Rise (x in 12)	Roof Reflectance	Roof Emittance	Cool Roof	Status	Verified Existing Condition	Existing Construction
Roof	Existing Lower Zone	Ex No HERS Ver Roof (Cath	225	Front	268	0	0	0.1	0.85	No	Existing	No	
Roof 2	Existing Upper Zone	Ex No HERS Ver Roof (Cath	225	Front	475	0	6	0.1	0.85	No	Existing	No	
Roof 3	Existing Upper Zone	Ex No HERS Ver Roof (Cath	225	Front	1576	0	0	0.1	0.85	No	Existing	No	
Roof 4	Addition Upper Zone	R-30 Roof	225	Front	306	0	0	0.1	0.85	No	New	n/a	

FENESTRATION / GLAZING

01	02	03	04	05	06	07	08	09	10	11	12	13	14	15	16
Name	Type	Surface	Orientation	Azimuth	Width (ft)	Height (ft)	Mult.	Area (ft^2)	U-factor	U-factor Source	SHGC	SHGC Source	Exterior Shading	Status	Verified Existing Condition
Ex Glazing	Window	Front Wall	Front	225			1	15	0.58	Table 110.6-A	0.65	Table 110.6-B	Bug Screen	Existing	No
New Glazing	Window	Front Wall	Front	225			1	43	0.3	NFRC	0.4	NFRC	Bug Screen	Altered	No
Ex Glazing 2	Window	Right Wall	Right	135			1	65	0.58	Table 110.6-A	0.65	Table 110.6-B	Bug Screen	Existing	No
New Glazing 2	Window	Right Wall	Right	135			1	45	0.3	NFRC	0.4	NFRC	Bug Screen	Altered	No
Glazing	Window	Front Wall 2	Front	225			1	45	0.3	NFRC	0.4	NFRC	Bug Screen	New	NA
Ex Glazing 3	Window	Front Wall 3	Front	225			1	65	0.58	Table 110.6-A	0.65	Table 110.6-B	Bug Screen	Existing	No

NOTICE: This document has been generated by California Home Energy Efficiency Rating Services (CHEERS) using information uploaded by third parties not affiliated with or related to CHEERS. Therefore, CHEERS is not responsible for, and cannot guarantee, the accuracy or completeness of the information contained in this document.

FENESTRATION / GLAZING

01	02	03	04	05	06	07	08	09	10	11	12	13	14	15	16
Name	Type	Surface	Orientation	Azimuth	Width (ft)	Height (ft)	Mult.	Area (ft^2)	U-factor	U-factor Source	SHGC	SHGC Source	Exterior Shading	Status	Verified Existing Condition
New Glazing 3	Window	Front Wall 3	Front	225			1	9	0.3	NFRC	0.4	NFRC	Bug Screen	Altered	No
Ex Glazing 4	Window	Left Wall	Left	315			1	107	0.58	Table 110.6-A	0.65	Table 110.6-B	Bug Screen	Existing	No
Ex Glazing 5	Window	Back Wall 2	Back	45			1	71	0.58	Table 110.6-A	0.65	Table 110.6-B	Bug Screen	Existing	No
New Glazing 4	Window	Back Wall 2	Back	45			1	15	0.3	NFRC	0.4	NFRC	Bug Screen	Altered	No
Ex Glazing 6	Window	Right Wall 2	Right	135			1	17	0.58	Table 110.6-A	0.65	Table 110.6-B	Bug Screen	Existing	No
Glazing 2	Window	Front Wall 4	Front	225			1	30	0.3	NFRC	0.4	NFRC	Bug Screen	New	NA
Glazing 3	Window	Back Wall 3	Back	45			1	30	0.3	NFRC	0.4	NFRC	Bug Screen	New	NA
Glazing 4	Window	Right Wall 3	Right	135			1	94	0.3	NFRC	0.4	NFRC	Bug Screen	New	NA

SLAB FLOORS

01	02	03	04	05	06	07	08	09	10
Name	Zone	Area (ft^2)	Perimeter (ft)	Edge Insul. R-value and Depth	Edge Insul. R-value and Depth	Carpeted Fraction	Heated	Status	Verified Existing Condition
Floor	Existing Lower Zone	597	78	none	0	80%	No	Existing	No
Floor 2	Addition Lower Zone	469	12	none	0	80%	No	New	n/a

SLAB FLOORS

01	02	03	04	05	06	07	08	09	10
Name	Zone	Area (ft^2)	Perimeter (ft)	Edge Insul. R-value and Depth	Edge Insul. R-value and Depth	Carpeted Fraction	Heated	Status	Verified Existing Condition
Floor 3	__Garage__	182	29	none	0	0%	No	Existing	No

OPAQUE SURFACE CONSTRUCTIONS

01	02	03	04	05	06	07	08
Construction Name	Surface Type	Construction Type	Framing	Total Cavity R-value	Interior / Exterior Continuous R-value	U-factor	Assembly Layers
Garage Wall	Exterior Walls	Wood Framed Wall	2x4 @ 16 in. O. C.	R-0	None / None	0.361	Inside Finish: Gypsum Board Cavity / Frame: no insul. / 2x4 Exterior Finish: 3 Coat Stucco
Ex No HERS Ver 2x4 Wall	Exterior Walls	Wood Framed Wall	2x4 @ 16 in. O. C.	R-13	None / None	0.101	Inside Finish: Gypsum Board Cavity / Frame: R-13 / 2x4 Exterior Finish: 3 Coat Stucco
R-15 Wall	Exterior Walls	Wood Framed Wall	2x4 @ 16 in. O. C.	R-15	None / None	0.095	Inside Finish: Gypsum Board Cavity / Frame: R-15 / 2x4 Exterior Finish: 3 Coat Stucco
Ex No HERS Ver Roof (Cath	Cathedral Ceilings	Wood Framed Ceiling	2x10 @ 16 in. O. C.	R-30	None / None	0.037	Roofing : Light Roof (Asphalt Shingle) Roof Deck: Wood Siding/sheathing/decking Cavity / Frame: R-30 / 2x10 Inside Finish: Gypsum Board
R-30 Roof	Cathedral Ceilings	Wood Framed Ceiling	2x10 @ 16 in. O. C.	R-30	None / None	0.037	Roofing : Light Roof (Asphalt Shingle) Roof Deck: Wood Siding/sheathing/decking Cavity / Frame: R-30 / 2x10 Inside Finish: Gypsum Board

NOTICE: This document has been generated by California Home Energy Efficiency Rating Services (CHEERS) using information uploaded by third parties not affiliated with or related to CHEERS. Therefore, CHEERS is not responsible for, and cannot guarantee, the accuracy or completeness of the information contained in this document.

OPAQUE SURFACE CONSTRUCTIONS

01	02	03	04	05	06	07	08
Construction Name	Surface Type	Construction Type	Framing	Total Cavity R-value	Interior / Exterior Continuous R-value	U-factor	Assembly Layers
Ex No HERS Ver 2x4 Wall1	Interior Walls	Wood Framed Wall	2x4 @ 16 in. O. C.	R-13	None / None	0.092	Inside Finish: Gypsum Board Cavity / Frame: R-13 / 2x4 Other Side Finish: Gypsum Board
R-0 Wall	Interior Walls	Wood Framed Wall	2x4 @ 16 in. O. C.	R-0	None / None	0.277	Inside Finish: Gypsum Board Cavity / Frame: no insul. / 2x4 Other Side Finish: Gypsum Board
R-15 Wall1	Interior Walls	Wood Framed Wall	2x4 @ 16 in. O. C.	R-15	None / None	0.086	Inside Finish: Gypsum Board Cavity / Frame: R-15 / 2x4 Other Side Finish: Gypsum Board
Ex No HERS Ver Floor (Cra	Floors Over Crawlspace	Wood Framed Floor	2x6 @ 16 in. O. C.	R-19	None / None	0.049	Floor Surface: Carpeted Floor Deck: Wood Siding/sheathing/decking Cavity / Frame: R-19 / 2x6
R-19 Floor No Crawlspace	Exterior Floors	Wood Framed Floor	2x6 @ 16 in. O. C.	R-19	None / None	0.052	Floor Surface: Carpeted Floor Deck: Wood Siding/sheathing/decking Cavity / Frame: R-19 in 5-1/2 in. (R-18) / 2x6
Ex No HERS Ver Floor (No-	Interior Floors	Wood Framed Floor	2x12 @ 16 in. O. C.	R-0	None / None	0.196	Floor Surface: Carpeted Floor Deck: Wood Siding/sheathing/decking Cavity / Frame: no insul. / 2x12 Ceiling Below Finish: Gypsum Board

BUILDING ENVELOPE - HERS VERIFICATION

01	02	03	04	05
Quality Insulation Installation (QII)	High R-value Spray Foam Insulation	Building Envelope Air Leakage	CFM50	CFM50
Not Required	Not Required	N/A	n/a	n/a

NOTICE: This document has been generated by California Home Energy Efficiency Rating Services (CHEERS) using information uploaded by third parties not affiliated with or related to CHEERS. Therefore, CHEERS is not responsible for, and cannot guarantee, the accuracy or completeness of the information contained in this document.

t: (415) 703-6904
e: info@apparatusarc.com
4459 19th Street
San Francisco, CA 94114
APPARATUS ARCHITECTURE

LICENSED ARCHITECT
STUART D. HILLS
No. C24966
Renew. 9-30-2027
STATE OF CALIFORNIA

RESIDENTIAL ADDITION
1611 WILLOW AVE
BURLINGAME, CA 94010
PARCEL NUMBER 028142350

OWNER:
VEENA DUBAL
J RYAN GILFOIL

date	NOV 17, 2025
scale	1/8" = 1'-0"
revis	
2	REVISION JUN 01, 2026
3	REVISION JUN 18, 2026
4	REVISION JUN 18, 2026

A0.3

WATER HEATING SYSTEMS

01	02	03	04	05	06	07	08	09	10	11	12
Name	System Type	Distribution Type	Water Heater Name	Number of Units	Solar Heating System	Compact Distribution	HERS Verification	Water Heater Name (#)	Status	Verified Existing Condition	Existing Water Heating System
DHW Sys 1	Domestic Hot Water (DHW)	Standard	DHW Heater 1	1	n/a	None	n/a	DHW Heater 1 (1)	Existing	No	

WATER HEATERS

01	02	03	04	05	06	07	08	09	10	11	12	13	14	15
Name	Heating Element Type	Tank Type	# of Units	Tank Vol. (gal)	Heating Efficiency Type	Efficiency	Rated Input Type	Input Rating or Pilot	Tank Insulation R-value (int/ext)	Standby Loss or Recovery Eff	1st Hr. Rating or Flow Rate	Tank Location	Status	Verified Existing Condition
DHW Heater 1	Gas	Small Storage	1	50	EF	0.58	Btu/Hr	75000	0	78	n/a		Existing	No

WATER HEATING - HERS VERIFICATION

01	02	03	04	05	06	07
Name	Pipe Insulation	Parallel Piping	Compact Distribution	Compact Distribution Type	Recirculation Control	Shower Drain Water Heat Recovery
DHW Sys 1 - 1/1	Not Required	Not Required	Not Required	None	Not Required	Not Required

SPACE CONDITIONING SYSTEMS

01	02	03	04	05	06	07	08	09	10	11	12
Name	System Type	Heating Unit Name	Heating Equipment Count	Cooling Unit Name	Cooling Equipment Count	Fan Name	Distribution Name	Required Thermostat Type	Status	Verified Existing Condition	Existing HVAC System
HVAC1	Heat pump heating cooling	Heat Pump System 1	1	Heat Pump System 1	1	HVAC Fan 1	Air Distribution System 1	Setback	New	No	

HVAC - HEAT PUMPS

01	02	03	04	05	06	07	08	09	10	11	12	13
			Heating				Cooling					
Name	System Type	Number of Units	Heating Efficiency Type	HSPF/HSPF2/COP	Cap 47	Cap 17	Cooling Efficiency Type	SEER/SEER2	EER/EER2/CEER	Zonally Controlled	Compressor Type	HERS Verification
Heat Pump System 1	Central split HP	1	HSPF2	7.5	54000	27000	EER 2/SEER 2	14	11.7	Not Zonal	Single Speed	Heat Pump System 1-hers-htpump

HVAC HEAT PUMPS - HERS VERIFICATION

01	02	03	04	05	06	07	08	09
Name	Verified Airflow	Airflow Target	Verified EER/EER2	Verified SEER/SEER2	Verified Refrigerant Charge	Verified HSPF/HSPF2	Verified Heating Cap 47	Verified Heating Cap 17
Heat Pump System 1-hers-htpump	Required	350	Not Required	Not Required	Yes	No	Yes	Yes

HVAC - DISTRIBUTION SYSTEMS

01	02	03	04	05	06	07	08	09	10	11	12	13	14	15	16
			Duct Ins. R-value		Duct Location		Surface Area								
Name	Type	Design Type	Supply	Return	Supply	Return	Supply	Return	Bypass Duct	Duct Leakage	HERS Verification	Status	Verified Existing Condition	Existing Distribution system	New Ducts >= 25 ft
Air Distribution System 1	Unconditioned crawl space	Non-Verified	R-6	R-6	Crawl Space	Crawl Space	n/a	n/a	No Bypass Duct	Sealed and Tested	Air Distribution System 1-hers-dist	New	n/a		No

HVAC DISTRIBUTION - HERS VERIFICATION

01	02	03	04	05	06	07	08	09
Name	Duct Leakage Verification	Duct Leakage Target (%)	Verified Duct Location	Verified Duct Design	Buried Ducts	Deeply Buried Ducts	Low-leakage Air Handler	Low Leakage Ducts Entirely in Conditioned Space
Air Distribution System 1-hers-dist	Yes	5.0	Not Required	Not Required	Not Required	Credit not taken	Not Required	No

HVAC - FAN SYSTEMS

01	02	03	04
Name	Fan Power (Watts/CFM)	Fan Power (Watts)	Name
HVAC Fan 1	HVAC Fan	0.58	HVAC Fan 1-hers-fan

HVAC FAN SYSTEMS - HERS VERIFICATION

01	02	03
Name	Verified Fan Watt Draw	Required Fan Efficacy (Watts/CFM)
HVAC Fan 1-hers-fan	Required	0.58

HERS RATER VERIFICATION OF EXISTING CONDITIONS

DOCUMENTATION AUTHOR'S DECLARATION STATEMENT

I. I certify that this Certificate of Compliance documentation is accurate and complete.

Documentation Author Name: Samuel Suzuki	Documentation Author Signature: Samuel Suzuki
Company: Energy Calc Co.	Signature Date: 08/18/2025
Address: 45 Mitchell Blvd #16	CEA/ HERS Certification Identification (If applicable):
City/State/Zip: San Rafael, CA 94903	Phone: 415-457-0990

RESPONSIBLE PERSON'S DECLARATION STATEMENT

I certify the following under penalty of perjury, under the laws of the State of California:
1. I am eligible under Division 3 of the Business and Professions Code to accept responsibility for the building design identified on this Certificate of Compliance.
2. I certify that the energy features and performance specifications identified on this Certificate of Compliance conform to the requirements of Title 24, Part 1 and Part 6 of the California Code of Regulations.
3. The building design features or system design features identified on this Certificate of Compliance are consistent with the information provided on other applicable compliance documents, worksheets, calculations, plans and specifications submitted to the enforcement agency for approval with this building permit application.

Responsible Designer Name: Michael Baushke	Responsible Designer Signature: Michael Baushke
Company: APPARATUS Architecture	Date Signed: 08/18/2025
Address: 4450 18th St.	License:
City/State/Zip: San Francisco, CA 94114	Phone: (415) 703-0904

2022 Single-Family Residential Mandatory Requirements Summary

NOTE: Single-family residential buildings subject to the Energy Codes must comply with all applicable mandatory measures, regardless of the compliance approach used. Review the respective section for more information.
(04/2022)

Building Envelope:

§ 110.6(a)1:	**Air Leakage.** Manufactured fenestration, exterior doors, and exterior pet doors must limit air leakage to 0.3 CFM per square foot or less when tested per NFRC 400, ASTM E283, or AAMA/WDMA/CSA 101/I.S.2/A440.2011. *
§ 110.6(a)5:	**Labeling.** Fenestration products and exterior doors must have a label meeting the requirements of § 10-111(a).
§ 110.6(b):	**Field fabricated exterior doors and fenestration** products must use U-factors and solar heat gain coefficient (SHGC) values from Tables 110.6-A, 110.6-B, or JA4.5 for exterior doors. They must be caulked and/or weather-stripped.
§ 110.7:	**Air Leakage.** All joints, penetrations, and other openings in the building envelope that are potential sources of air leakage must be caulked, gasketed, or weather stripped.
§ 110.8(a):	**Insulation Certification by Manufacturers.** Insulation must be certified by the Department of Consumer Affairs, Bureau of Household Goods and Services (BHGS).
§ 110.8(g)	**Insulation Requirements for Heated Slab Floors.** Heated slab floors must be insulated per the requirements of § 110.8(g).
§ 110.8(i):	**Roofing Products Solar Reflectance and Thermal Emittance.** The thermal emittance and aged solar reflectance values of the roofing material must meet the requirements of § 110.8(i) and be labeled per §10-113 when the installation of a cool roof is specified on the CF1R.
§ 110.8(j):	**Radiant Barrier.** When required, radiant barriers must have an emittance of 0.05 or less and be certified to the Department of Consumer Affairs.
§ 150.0(a):	**Roof Deck, Ceiling and Rafter Roof Insulation.** Roof decks in newly constructed attics in climate zones 4 and 8-16 area-weighted average U-factor not exceeding U0.184. Ceiling and rafter roofs minimum R-22 insulation in wood-frame ceiling, or area-weighted average U-factor must not exceed 0.043. Rafter roof alterations minimum R-19 or area-weighted average U-factor of 0.054 or less. Attic access doors must have permanently attached insulation using adhesive or mechanical fasteners. The attic access must be gasketed to prevent air leakage. Insulation must be installed in direct contact with a roof or ceiling which is sealed to limit infiltration and exfiltration, as specified in § 110.7, including but not limited to placing insulation either above or below the roof deck or on top of a drywall ceiling. *
§ 150.0(b):	**Loose-fill Insulation.** Loose fill insulation must meet the manufacturer's required density for the labeled R-value.
§ 150.0(c):	**Wall Insulation.** Minimum R-13 insulation in 2x4 inch wood framing wall or have a U-factor of 0.102 or less, or R-20 in 2x6 inch wood framing or have a U-factor of 0.071 or less. Opaque non-framed assemblies must have an overall assembly U-factor not exceeding 0.102. Masonry walls must meet Tables 150.1-A or B. *
§ 150.0(d):	**Raised-floor Insulation.** Minimum R-19 insulation in raised wood framed floor or 0.037 maximum U-factor.
§ 150.0(l):	**Slab Edge Insulation.** Slab-edge insulation must meet all of the following: have a water absorption rate, for the insulation material alone, without facings, no greater than 0.3 percent, have a water vapor permeance no greater than 2.0 perm per inch, be protected from physical damage and UV light deterioration; and, when installed as part of a heated slab floor, meet the requirements of § 110.8(g).
§ 150.0(q)1:	**Vapor Retarder.** In climate zones 1 through 16, the earth floor of unvented crawl space must be covered with a Class I or Class II vapor retarder. This requirement also applies to controlled ventilation crawl space for buildings complying with the exception to §150.0(d).
§ 150.0(q)2:	**Vapor Retarder.** In climate zones 14 and 16, a Class I or Class II vapor retarder must be installed on the conditioned space side of all insulation in all exterior walls, vented attics, and unvented attics with air-permeable insulation.
§ 150.0(q):	**Fenestration Products.** Fenestration, including skylights, separating conditioned space from unconditioned space or outdoors must have a maximum U-factor of 0.45, or area-weighted average U-factor of all fenestration must not exceed 0.45. *

Fireplaces, Decorative Gas Appliances, and Gas Log:

§ 110.5(e):	**Pilot Light.** Continuously burning pilot lights are not allowed for indoor and outdoor fireplaces.
§ 150.0(e)1:	**Closable Doors.** Masonry or factory-built fireplaces must have a closable metal or glass door covering the entire opening of the firebox.
§ 150.0(e)2:	**Combustion Intake.** Masonry or factory-built fireplaces must have a combustion outside air intake, which is at least six square inches in area and is equipped with a readily accessible, operable, and tight fitting damper or combustion air control device.
§ 150.0(e)3:	**Flue Damper.** Masonry or factory-built fireplaces must have a flue damper with a readily accessible control. *

Space Conditioning, Water Heating, and Plumbing System:

§ 110.0-§ 110.3: § 110.2(a):	**Certification.** Heating, ventilation, and air conditioning (HVAC) equipment, water heaters, showerheads, faucets, and all other regulated appliances must be certified by the manufacturer to the California Energy Commission. **HVAC Efficiency.** Equipment must meet the applicable efficiency requirements in Table 110.2-A through Table 110.2-N. *
§ 110.2(b):	**Controls for Heat Pumps with Supplementary Electric Resistance Heaters.** Heat pumps with supplementary electric resistance heaters must have controls that prevent supplementary heater operation when the heating load can be met by the heat pump alone, and in which the cut-on temperature for compression heating is higher than the cut-on temperature for supplementary heating, and the cut-off temperature for compression heating is higher than the cut-off temperature for supplementary heating. *
§ 110.2(c):	**Thermostats.** All heating or cooling systems not controlled by a central energy management control system (EMCS) must have a setback thermostat. *
§ 110.3(c)3:	**Insulation.** Unfired service water heater storage tanks and solar water-heating backup tanks must have adequate insulation, or tank surface heat loss rating.
§ 110.3(c)6:	**Isolation Valves.** Instantaneous water heaters with an input rating greater than 6.8 kBtu per hour (2 kW) must have isolation valves with hose bibbs or other fittings on both cold and hot water lines to allow for flushing the water heater when the valves are closed.

2022 Single-Family Residential Mandatory Requirements Summary

§ 110.5:	**Pilot Lights.** Continuously burning pilot lights are prohibited for natural gas: fan-type central furnaces; household cooking appliances (except appliances without an electrical supply voltage connection with pilot lights that consume less than 150 Btu per hour); and pool and spa heaters. *
§ 150.0(n)1:	**Building Cooling and Heating Loads.** Heating and/or cooling loads are calculated in accordance with the ASHRAE Handbook, Equipment Volume, Applications Volume, and Fundamentals Volume; the SMACNA Residential Comfort System Installation Standards Manual, or the ACCA Manual J using design conditions specified in § 150.0(h)2.
§ 150.0(n)3A:	**Clearances.** Air conditioner and heat pump outdoor condensing units must have a clearance of at least five feet from the outlet of any dryer.
§ 150.0(n)3B:	**Liquid Line Drier.** Air conditioners and heat pump systems must be equipped with liquid line filter driers if required, as specified by the manufacturer's instructions.
§ 150.0(j) 1:	**Water Piping, Solar Water-heating System Piping, and Space Conditioning System Line Insulation.** All domestic hot water piping must be insulated as specified in § 609.11 of the California Plumbing Code. *
§ 150.0(j)2:	**Insulation Protection.** Piping insulation must be protected from damage, including that due to sunlight, moisture, equipment maintenance, and wind as required by §120.3(b). Insulation exposed to weather must be water retardant and protected from UV light (no adhesive tapes). Insulation covering chilled water piping and refrigerant suction piping located outside the conditioned space must include, or be protected by, a Class I or Class II vapor retarder. Pipe insulation buried below grade must be installed in a waterproof and non-crushable casing or sleeve.
§ 150.0(n)1:	**Gas or Propane Water Heating Systems.** Systems using gas or propane water heaters to serve individual dwelling units must designate a space at least 2.5' x 2.5' x 7' suitable for the future installation of a heat pump water heater, and meet electrical and plumbing requirements, based on the distance between this designated space and the water heater location; and a condensate drain no more than 2' higher than the base of the water heater.
§ 150.0(n)3:	**Solar Water-heating Systems.** Solar water-heating systems and collectors must be certified and rated by the Solar Rating and Certification Corporation (SRCC), the International Association of Plumbing and Mechanical Officials, Research and Testing (IAPMO R&T), or by a listing agency that is approved by the executive director.

Ducts and Fans:

§ 110.8(d)3:	**Ducts.** Insulation installed on an existing space-conditioning duct must comply with § 604.0 of the California Mechanical Code (CMC). If a contractor installs the insulation, the contractor must certify to the customer, in writing, that the insulation meets this requirement.
§ 150.0(m)1:	**CMC Compliance.** All air distribution system ducts and plenums must meet CMC §§ 601.0-605.0 and ANSI/SMACNA-006-2006 HVAC Duct Construction Standards Metal and Flexible 3rd Edition. Portions of supply-air and return-air ducts and plenums must be insulated to R-6.0 or higher; ducts located entirely in conditioned space as confirmed through field verification and diagnostic testing (RA3.1.4.3.8) do not require insulation. Connections of metal ducts and inner core of flexible ducts must be mechanically fastened. Openings must be sealed with mastic, tape, or other duct-closure system that meets the applicable UL requirements, or aerosol sealant that meets UL 723. The combination of mastic and either mesh or tape must be used to seal openings greater than ¼". If mastic or tape is used. Building cavities, air handler support platforms, and plenums designed or constructed with materials other than sealed sheet metal, duct board or flexible duct must not be used to convey conditioned air. Building cavities and support platforms may contain ducts; ducts installed in these spaces must not be compressed. *
§ 150.0(m)2:	**Factory-Fabricated Duct Systems.** Factory fabricated duct systems must comply with applicable requirements for duct construction, connections, and closures, joints and seams of duct systems and their components: must not be sealed with cloth back rubber adhesive duct tapes unless such tape is used in combination with mastic and draw bands.
§ 150.0(m)3:	**Field-Fabricated Duct Systems.** Field-fabricated duct systems must comply with applicable requirements for: pressure-sensitive tapes, mastics, sealants, and other requirements specified for duct construction.
§ 150.0(m)7:	**Backdraft Damper.** Fan systems that exchange air between the conditioned space and outdoors must have backdraft or automatic dampers.
§ 150.0(m)8	**Gravity Ventilation Dampers.** Gravity ventilating systems serving conditioned space must have either automatic or readily accessible, manually operated dampers in all openings to the outside, except combustion inlet and outlet air openings and elevator shaft vents.
§ 150.0(m)9	**Protection of Insulation.** Insulation must be protected from damage due to rainlight, moisture, equipment maintenance, and wind. Insulation exposed to weather must be suitable for outdoor service (e.g., protected by aluminum, sheet metal, painted canvas, or plastic cover). Cellular foam insulation must be protected as above or painted with a water retardant and solar radiation-resistant coating.
§ 150.0(m)10:	**Porous Inner Core Flex Duct.** Porous inner cores of flex ducts must have a non-porous layer or air barrier between the inner core and outer vapor barrier.
§ 150.0(m)11:	**Duct System Sealing and Leakage Test.** When space conditioning systems use forced air duct systems to supply conditioned air to an occupiable space, the ducts must be sealed and duct leakage tested, as confirmed through field verification and diagnostic testing, in accordance with Reference Residential Appendix RA3.1.
§ 150.0(m)12:	**Air Filtration.** Space conditioning systems with ducts exceeding 10 feet and the supply side of ventilation systems must have MERV 13 or equivalent filters. Filters for space conditioning systems must have a two inch depth or can be one inch if tested per Equation 150.0-A. Clean filter pressure drop and labeling must meet the requirements in §150.0(m)12. Filters must be accessible for regular service. Filter racks or grilles must use gaskets, sealing, or other means to close gaps around the inserted filters to and prevents air from bypassing the filter. *

2022 Single-Family Residential Mandatory Requirements Summary

§ 150.0(m)13:	**Space Conditioning System Airflow Rate and Fan Efficacy.** Space conditioning systems that use ducts to supply cooling must have a hole for the placement of a static pressure probe, or a permanently installed static pressure probe in the supply plenum. Airflow must be ≥ 350 CFM per ton of nominal cooling capacity, and an air-handling unit fan efficacy ≤ 0.45 watts per CFM for gas furnace air handlers and ≤ 0.59 watts per CFM for all others. Small duct high velocity systems must provide an airflow ≥ 250 CFM per ton of nominal cooling capacity, and an air-handing unit fan efficacy ≤ 0.62 watts per CFM. Field verification testing is required in accordance with Reference Residential Appendix RA3.3. *

Ventilation and Indoor Air Quality:

§ 150.0(o)1:	**Requirements for Ventilation and Indoor Air Quality.** All dwelling units must meet the requirements of ASHRAE Standard 62.2, Ventilation and Acceptable Indoor Air Quality in Residential Buildings subject to the amendments specified in § 150.0(o) 1. *
§ 150.0(o)1B:	**Central Fan Integrated (CFI) Ventilation Systems.** Continuous operation of CFI air handlers is not allowed to provide the whole-dwelling unit ventilation airflow required per §150.0(o) 1C. A motorized damper(s) must be installed on the ventilation duct(s) that prevents all airflow through the space conditioning duct system when the damper(s) is closed and controlled per § 150.0(o) 1B vi&v. CFI ventilation systems must have controls that track outdoor air ventilation run time, and either open or close the motorized damper(s) for compliance with §150.0(o) 1C.
§ 150.0(o)1C:	**Whole-Dwelling Unit Mechanical Ventilation for Single-Family Detached and townhouses.** Single-family detached dwelling units, and attached dwelling units not sharing ceilings or floors with other dwelling units, occupiable spaces, public garages, or commercial spaces must have mechanical ventilation airflow specified in § 150.0(o) 1C-ii.
§ 150.0(o)1G:	**Local Mechanical Exhaust.** Kitchens and bathrooms must have local mechanical exhaust; nonenclosed kitchens must have demand-controlled exhaust system meeting requirements of § 150.0(o) 1Gii, enclosed kitchens and bathrooms can use demand-controlled or continuous exhaust meeting §150.0(o) 1Giii-v. Airflow must be measured by the installer per §150.0(o) 1Gv, and rated for sound per §150.0(o) 1Gvi. *
§ 150.0(o)1H&I:	**Airflow Measurement and Sound Ratings of Whole-Dwelling Unit Ventilation Systems.** The airflow required per § 150.0(o) 1C must be measured by using a flow hood, flow grid, or other airflow measuring device at the fan's inlet or outlet terminals/grilles per Reference Residential Appendix RA3.7. Whole-Dwelling unit ventilation systems must be rated for sound per ASHRAE 62.2.§7.2 at no less than the minimum airflow rate required by § 150.0(o) 1C.
§ 150.0(o)2:	**Field Verification and Diagnostic Testing.** Whole-Dwelling Unit ventilation airflow, vented range hood airflow and sound rating, and HRV and ERV fan efficacy must be verified in accordance with Reference Residential Appendix RA3.7. Vented range hoods must be verified per Reference Residential Appendix RA3.7.4.3 to confirm if it is rated by HVI or AHAM to comply with the airflow rates and sound requirements per §150.0(o) 1G

Pool and Spa Systems and Equipment:

§ 110.4(a):	**Certification by Manufacturers.** Any pool or spa heating system or equipment must be certified to have all of the following: compliance with the Appliance Efficiency Regulations and listing in MAEDbS; an on-off switch mounted outside of the heater that allows shutting off the heater without adjusting the thermostat setting; a permanent weatherproof plate or card with operating instructions; and must not use electric resistance heating. *
§ 110.4(b)1:	**Piping.** Any pool or spa heating system or equipment must be installed with at least 36 inches of pipe between the filter and the heater, or dedicated suction and return lines, or built-in or built-up connections to allow for future solar heating.
§ 110.4(b)2:	**Covers.** Outdoor pools or spas that have a heat pump or gas heater must have a cover.
§ 110.4(b)3:	**Directional Inlets and Time Switches for Pools.** Pools must have directional inlets that adequately mix the pool water, and a time switch that will allow all pumps to be set or programmed to run only during off-peak electric demand periods.
§ 110.5:	**Pilot Light.** Natural gas pool and spa heaters must not have a continuously burning pilot light.
§ 150.0(p):	**Pool Systems and Equipment Installation.** Residential pool systems or equipment must meet the specified requirements for pump sizing, flow rate, piping, filters, and valves. *

Lighting:

§ 110.9:	**Lighting Controls and Components.** All lighting control devices and systems, ballasts, and luminaires must meet the applicable requirements of § 110.9. *
§ 150.0(k)1A:	**Luminaire Efficacy.** All installed luminaires must meet the requirements in Table 150.0-A, except lighting integral to exhaust fans, kitchen range hoods, bath vanity mirrors, and garage door openers; navigation lighting less than 5 watts; and lighting internal to drawers, cabinets, and linen closets with an efficacy of at least 45 lumens per watt.
§ 150.0(k)1B:	**Screw based luminaires.** Screw based luminaires must contain lamps that comply with Reference Joint Appendix JA8. *
§ 150.0(k) 1C:	**Recessed Downlight Luminaires in Ceilings.** Luminaires recessed into ceilings must not contain screw based sockets; must be airtight, and must be sealed with a gasket or caulk. California Electrical Code § 410.116 must also be met.
§ 150.0(k) 1D:	**Light Sources in Enclosed or Recessed Luminaires.** Lamps and other separable light sources that are not compliant with the JA8 elevated temperature requirements, including marking requirements, must not be installed in enclosed or recessed luminaires.
§ 150.0(k) 1E:	**Blank Electrical Boxes.** The number of electrical boxes that are more than five feet above the finished floor and do not contain a luminaire or other device shall be no more than the number of bedrooms. These boxes must be served by a dimmer, vacancy sensor control, low voltage wiring, or fan speed control.
§ 150.0(k) 1F:	**Lighting Integral to Exhaust Fans.** Lighting integral to exhaust fans (except when installed by the manufacturer in kitchen exhaust hoods), must meet the applicable requirements of § 150.0(k).

2022 Single-Family Residential Mandatory Requirements Summary

§ 150.0(k)1G:	**Screw based luminaires.** Screw based luminaires must contain lamps that comply with Reference Joint Appendix JA8. *
§ 150.0(k) 1H:	**Light Sources in Enclosed or Recessed Luminaires.** Lamps and other separable light sources that are not compliant with the JA8 elevated temperature requirements, including marking requirements, must not be installed in enclosed or recessed luminaires.
§ 150.0(k) 1I:	**Light Sources in Drawers, Cabinets, and Linen Closets.** Light sources internal to drawers, cabinetry or linen closets are not required to comply with Table 150.0-A or be controlled by vacancy sensors provided that they are rated to consume no more than 5 watts of power, emit no more than 150 lumens, and are equipped with controls that automatically turn the lighting off when the drawer, cabinet or linen closet is closed.
§ 150.0(k)2A:	**Interior Switches and Controls.** All forward phase cut dimmers used with LED light sources must comply with NEMA SSL 7A.
§ 150.0(k)2B:	**Interior Switches and Controls.** Exhaust fans must be controlled separately from lighting systems.
§ 150.0(k)2A:	**Accessible Controls.** Lighting must have readily accessible wall-mounted controls that allow the lighting to be manually turned on and off. *
§ 150.0(k)2B	**Multiple Controls.** Controls must not bypass a dimmer, occupant sensor, or vacancy sensor function if the dimmer or sensor is installed to comply with § 150.0(k).
§ 150.0(k)2C:	**Mandatory Requirements.** Lighting controls must comply with the applicable requirements of § 110.9.
§ 150.0(k)2D:	**Energy Management Control Systems.** An energy management control system (EMCS) may be used to comply with dimming, occupancy, and control requirements if it provides the functionality of the specified control per § 110.9 and the physical control requirements specified in § 150.0(k)2A.
§ 150.0(k)2E:	**Automatic Shutoff Controls.** In bathrooms, garages, laundry rooms, utility rooms and walk-in closets, at least one installed luminaire must be controlled by an occupancy or vacancy sensor providing automatic-off functionality. Lighting inside drawers and cabinets with opaque fronts or doors must have controls that turn the light off when the drawer or door is closed.
§ 150.0(k)2F:	**Dimmers.** Lighting in habitable spaces (e.g., living rooms, dining rooms, kitchens, and bedrooms) must have readily accessible wall-mounted dimming controls that allow the lighting to be manually adjusted up and down. Forward phase cut dimmers controlling LED light sources in these spaces must comply with NEMA SSL 7A.
§ 150.0(k)2K:	**Independent controls.** Integrated lighting of exhaust fans shall be controlled independently from the fans. Lighting under cabinets or shelves, lighting in display cabinets, and switched outlets must be controlled separately from ceiling installed lighting.
§ 150.0(k)3A:	**Residential Outdoor Lighting.** For single-family residential buildings, outdoor lighting permanently mounted to a residential building, or to other buildings on the same lot, must have a manual on/off switch and either a photocell and motion sensor or automatic time switch control, or an astronomical time clock. An energy management control system that provides the specified control functionality and meets all applicable requirements may be used to meet these requirements.
§ 150.0(k)4:	**Internally illuminated address signs.** Internally illuminated address signs must either comply with § 140.8 or consume no more than 5 watts of power.
§ 150.0(k)5:	**Residential Garages for Eight or More Vehicles.** Lighting for residential parking garages for eight or more vehicles must comply with the applicable requirements for nonresidential garages in §§ 110.9, 130.0, 130.1, 130.4, 140.6, and 141.0.

Solar Readiness:

§ 110.10(a)1:	**Single-family Residences.** Single-family residences located in subdivisions with 10 or more single-family residences and where the application for a tentative subdivision map for the residences has been deemed complete and approved by the enforcement agency, which do not have a photovoltaic system installed, must comply with the requirements of § 110.10(b)-(e).
§110.10(b)1A:	**Minimum Solar Zone Area.** The solar zone must have a minimum total area as described below. The solar zone must comply with access, pathway, smoke ventilation, and spacing requirements as specified in Title 24, Part 9 or other parts of Title 24 or in any requirements adopted by a local jurisdiction. The solar zone total area must be comprised of areas that have no dimension less than 5 feet and are no less than 80 square feet each for buildings with roof areas less than or equal to 10,000 square feet or no less than 160 square feet each for buildings with roof areas greater than 10,000 square feet. For single-family residences, the solar zone must be located on the roof or overhang of the building and have a total area no less than 250 square feet. *
§ 110.10(b)2:	**Azimuth.** All sections of the solar zone located on sleep-sloped roofs must have an azimuth between 90-300° of true north.
§ 110.10(b)3A:	**Shading.** The solar zone must not contain any obstructions, including but not limited to: vents, chimneys, architectural features, and roof mounted equipment.
§ 110.10(b)3B:	**Shading.** Any obstruction located on the roof or any other part of the building that projects above a solar zone must be located at least twice the horizontal distance of the height difference between the highest point of the obstruction and the horizontal projection of the nearest point of the solar zone, measured in the vertical plane. *
§ 110.10(b)4:	**Structural Design Loads on Construction Documents.** For areas of the roof designated as a solar zone, the structural design loads for roof dead load and roof live load must be clearly indicated on the construction documents.
§ 110.10(c):	**Interconnection Pathways.** The construction documents must indicate: a location reserved for inverters and metering equipment and a pathway reserved for routing of conduit from the solar zone to the point of interconnection with the electrical service; and for single-family residences and central water-heating systems, a pathway reserved for routing plumbing from the solar zone to the water-heating system.
§ 110.10(d):	**Documentation.** A copy of the construction documents or a comparable document indicating the information from § 110.10(b)-(c) must be provided to the occupant.
§ 110.10(e)1:	**Main Electrical Service Panel.** The main electrical service panel must have a minimum busbar rating of 200 amps.
§ 110.10(e)2:	**Main Electrical Service Panel.** The main electrical service panel must have a reserved space to allow for the installation of a double pole-circuit breaker for a future solar electric installation. The reserved space must be permanently marked as "For Future Solar Electric."

Electric and Energy Storage Ready:

t: (415) 703-0904
e: info@apparatus.com
4450 18th Street
San Francisco, CA 94114
APPARATUS ARCHITECTURE

LICENSED ARCHITECT STUART D. HILLS No. C24966 Renew. 9-30-2027 STATE OF CALIFORNIA

RESIDENTIAL ADDITION

1611 WILLOW AVE
BURLINGAME, CA 94010
PARCEL NUMBER 028142350

OWNER:
VEENA DUBAL
J RYAN GILFOIL

date	NOV 17, 2025
scale	1/8" = 1'-0"
revis	
2	REVISION JUN 01, 2026
3	REVISION JUN 18, 2026
4	REVISION JUN 18, 2026

A0.4

2022 CALIFORNIA GREEN BUILDING CODE RESIDENTIAL CHECKLIST

New Residential Buildings must be designed to include the Green Building Mandatory Measures specified in this checklist. These Green Building Mandatory Measures also apply to additions or alterations of existing Residential Buildings which increase the building's conditioned area, volume, or size. These requirements only apply to the specific area of addition or alteration. 2022 CGC §301.1.1

Permit Number: _____ Project Address: 1611 WILLOW AVE

Specify which sheet includes the Measure, and add specific details listing where the measure is located on that page. Include exact code sections on plans.

Green Building Measure	Plan Sheet, and Details
ENERGY EFFICIENCY(2022 CEC §150.0) (2022 California Building Energy Efficiency Standards)	
2022 Energy Code performance (CF1R) compliance documentation must be provided digitally in 8-1/2" X 11" format, and, must be replicated on the plans. 2022 CEC §150.1	A0.4
SITE DEVELOPMENT (2022 CGC §4.106)	
Plans shall indicate how Grading and Paving will prevent surface water flows from entering buildings. Exception: Projects that do not alter the drainage path. 2022 CGC §4.106.3	N/A
Electric Vehicle (EV) Charging, parking spaces: comply with all relevant sections. 2022 CGC §4.106.4	A0.1
INDOOR WATER USE (2022 CGC §4.303)	
Standards for Plumbing fixtures and fittings. Plumbing fixtures and fittings shall be installed in accordance with the *California Plumbing Code*, and shall meet the applicable standards referenced in Table 1701.1 of the *California Plumbing Code*. 2022 CGC §4.303.3	A1.2 - A1.3
OUTDOOR WATER USE (2022 CGC §4.304)	
Residential developments shall submit a California Department of Water Resources' Model Water Use Efficient Landscape (MWELO) checklist. 2022 CGC §4.304.1	A0.5
ENHANCED DURABILITY AND REDUCED MAINTENANCE (2022 CGC §4.406)	
Annular spaces around pipes, electric cables, conduits or other openings in sole/bottom plates at exterior walls, shall be protected against the passage of rodents by closing such openings with cement mortar, concrete masonry, or similar method acceptable to the enforcing agency. 2022 CGC §4.406.1	M1.0 - M1.1
CONSTRUCTION WASTE MANAGEMENT (2022 CGC §4.408)	
Recycle and/or salvage a minimum 65% of the non-hazardous construction and demolition waste. This is not applicable to soil and land clearing debris. 2022 CGC §4.408.1	N/A

Green Building Measure	Plan Sheet, and Details
BUILDING MAINTENANCE AND OPERATION (2022 CGC §4.410)	
An operation and maintenance manual will be provided at final inspection. 2022 CGC §4.410.1 Where 5 or more multi-family dwelling units are constructed on a building site, provide readily accessible areas that serve all buildings on site and are identified for the depositing, storage, and collection of nonhazardous materials for recycling, including paper, corrugated cardboard, glass, plastics, organic waste and metals, or, meet local ordinance, if more restrictive. 2022 CGC §4.410.2	N/A
FIREPLACES (2022 CGC §4.503)	
Any installed gas fireplaces will be direct-vent sealed-combustion type. Any installed woodstove or pellet stove shall comply with US EPA NSPS emission limits. 2022 CGC 4.503.1 GAS IS NOT ALLOWED FOR NEW CONSTRUCTION BASED ON BURLINGAME'S REACH CODE.	N/A
POLLUTANT CONTROL (2022 CGC §4.504)	
At the time of rough installation, during storage on the construction site, and until final startup of the HVAC equipment, all duct and other related air distribution component openings will be covered with tape, plastic, sheet metal, or other methods acceptable to the enforcing agency to reduce the amount of water, dust and debris that may enter the system. 2022 CGC §4.504.1	M1.0 - M1.1
Adhesives, sealants, and caulks used on the project shall follow local and regional air pollution or air quality management district standards. 2022CGC §4.504.2.1	A0.0
Paints and coatings will comply with VOC limits. 2022CGC §4.504.2.2	A0.0
Aerosol paints and coatings will meet the Product-weighted MIR limits for ROC, and comply with percent VOC by weight of product limits, Regulation 8, Rule 49. 2022 CGC §4.504.2.3	A0.0
Documentation shall verify compliance for VOC finish materials. 2022 CGC §4.504.2.4	A0.0
Carpet systems will meet CALGREEN testing and product requirements. 2022 CGC §4.504.3	A0.0
Where resilient flooring is installed, at least 80% of the floor area receiving resilient flooring will comply with the California Green Building Code requirements. 2022 CGC §4.504.4	A0.0
Hardwood plywood, particleboard, and medium density fiberboard composite wood products shall comply with the low formaldehyde emission standards. 2022 CGC §4.504.5	A0.0
INTERIOR MOISTURE CONTROL (2022 CGC §4.505)	
A capillary break will be installed if a slab on grade foundation system is used. 2022 CGC §4.505.2.1	A5.0
Building materials with visible signs of water damage will not be installed. Wall and floor framing will not be enclosed when the framing members exceed 19% moisture content. Moisture content will be verified prior to finish material being applied. Replace wet insulation products, or allow to dry before enclosure. 2022 CGC §4.505.3	A0.0
INDOOR AIR QUALITY AND EXHAUST (CGC §4.506)	
Exhaust fans that are ENERGY STAR compliant, ducted and that terminate outside the building will be provided in every bathroom (bathtub, shower, or shower/tub combo). 2019 CGC §4.506.1 Unless functioning as a component of a whole-house ventilation system, fans must be controlled by a humidity control. 2022 CGC §4.506.2	M1.0 - M1.1

Green Building Measure	Plan Sheet, and Details
ENVIRONMENTAL COMFORT (2022 CGC §4.507)	
The heating and air-conditioning system will be sized, designed and have their equipment selected using the following methods: Heat Loss/Heat Gain values in accordance with ANSI/ACCA 2 Manual J-2016 or equal; Duct systems are sized according to ANSI/ACCA 1, Manual D-2016 or equivalent; Select heating and cooling equipment in accordance with ANSI/ACCA 3, Manual S-2014 or equivalent. 2022 CGC §4.507.	A0.3 - A0.4
VERIFICATION (2022 CGC §703)	
Upon request, verification of compliance with this code may include construction documents, plans, specifications, builder or installer certification, inspection reports, or other methods acceptable to the Building Division that will show substantial conformance with the 2022 Code requirements. 2022 CGC	A0.0

Responsible Designer's Declaration Statement

I hereby certify that this project has been designed to meet the requirements of the 2022 Green Building Code.

Name: IVAN MATZUMILLA

Address: 4450 18TH STREET

City/State/Zip Code: SAN FRACISCO, CALIFORNIA, 94114

Signature: Ivan Matzumilla Date: 11 - 18 - 2025

Contractor's Declaration Statement

I hereby certify, as the builder or installer, that this project will be constructed to meet the requirements of the 2022 Green Building Code.

Name: NICK JUDD

Address: 8 DELLBROOK AVE.

City/State/Zip Code: San Francisco, CA 94131

Signature: Nick Judd Date: 11/18/2025

OUTDOOR WATER USE EFFICIENCY CHECKLIST

NONRESIDENTIAL OUTDOOR WATER USE EFFICIENCY CHECKLIST

To Be Completed by Applicant Page 1 of 2

I certify that the subject project meets the specified requirements of the Water Conservation in Landscaping Ordinance.

IVAN MATZUMILLA — Signature; 11 - 17 - 2025 — Date

Project Information

❑ New Construction ❑ Rehabilitated ☒ Other:

❑ Commercial ❑ Institutional ❑ Irrigation only ❑ Industrial ❑ Other:

Applicant Name (print): IVAN MATZUMILLA Contact Phone #: 510-963-6423

Project Site Address: 1611 WILLOW AVE

Project Area (sq.ft. or acre): 7,850 SQ.FT. # of Units: 1 UNIT # of Meters: 1 METER

		Agency Review (Pass)	(Fail)
For all nonresidential projects, input an aggregate value for the entire project.	Total Landscape Area (sq.ft.):		
	Turf Irrigated Area (sq.ft.):	❑	❑
	Non-Turf Irrigated Area (sq.ft.):	❑	❑
	Irrigated Special Landscape Area (SLA) (sq.ft.):	❑	❑
	Water Feature Surface Area (sq.ft.):		

Landscape Parameter	Requirements	Project Compliance		
Plant Material	Low water using plants are installed for at least 100% of plant area	☒ Yes ❑ No, See Special Landscape Area and/or Recycled Water Area	❑	❑
Turf	No turf for the landscape area	❑ Yes	❑	❑
	There is no turf in parkways < 10 feet wide	☒ Yes ❑ No, if adjacent to a parking strip	❑	❑
	All turf is planted on slopes ≤ 25%	☒ Yes	❑	❑
Hydrozones	Plants are grouped by Hydrozones	☒ Yes	❑	❑
Compost	At least 4 cubic yards per 1,000 sq ft to a depth of 6 inches	☒ Yes ❑ No, See Soil Test	❑	❑
Mulch	At least 3-inches of mulch on exposed soil surfaces	☒ Yes	❑	❑
Irrigation System	Use of automatic irrigation controllers that use evapotranspiration or soil moisture sensor data and utilize a rain sensor	☒ Yes	❑	❑
	Irrigation controllers do not lose programming data when power source is interrupted	☒ Yes	❑	❑
	Irrigation system includes pressure regulators	☒ Yes	❑	❑
	Manual shut-off valves are installed near the connection to the water supply	☒ Yes	❑	❑
	All sprinkler heads installed in the landscape must document a distribution uniformity low quarter of 0.65 or higher	❑ Yes	❑	❑
	Areas < 10 feet shall be irrigated with subsurface irrigation	☒ Yes ❑ No, but there is no runoff or overspray	❑	❑
Metering	Separate irrigation submeters for landscape areas ≥ 1,000 sq ft	❑ Yes	❑	❑

[Agency Name, Address, Telephone#, Fax #]

OUTDOOR WATER USE EFFICIENCY CHECKLIST

	Areas ≥ 1,000 sq ft			
Swimming Pools / Spas	Cover required for new pools and spas	❑ Yes ☒ No, no new pool or spa	❑	❑
Water Features	Recirculating	☒ Yes	❑	❑
Documentation (per section 492.3)	Project Information	☒ Yes	❑	❑
	Water Efficient Landscape Worksheet (optional if ≤ 2,500 sq ft of landscape area)	❑ Prepared by professional	❑	❑
	Soil Management Report (optional if < 2,500 sq ft of landscape area)	❑ Prepared by professional	❑	❑
	Landscape Design Plan (optional if < 2,500 sq ft of landscape area)	❑ Prepared by professional	❑	❑
	Irrigation Design Plan (optional if < 2,500 sq ft of landscape area)	❑ Prepared by professional	❑	❑
	Grading Design Plan (optional if < 2,500 sq ft of landscape area)	❑ Prepared by professional	❑	❑
Audit	Post-installation audit completed	❑ Completed by professional	❑	❑

Page 2 of 2

Auditor:

Materials Received and Reviewed:

❑ Project Information
❑ Water Efficient Landscape Worksheet
❑ Nonresidential Outdoor Water Use Efficiency Checklist
❑ Post-Installation Audit
❑ Landscape Design Plan
❑ Soil Management Report
❑ Irrigation Design Plan
❑ Grading Design Plan

Date Reviewed:

❑ Follow up required (explain):

Date Resubmitted:

Date Approved:

Dedicated Irrigation Meter Required:

Meter sizing:

Material Distributed to Applicant

❑ Regional Water Efficient Landscape Ordinance
❑ Nonresidential Outdoor Water Use Efficiency Checklist
❑ Water Efficient Landscape Worksheet
❑ Plant List
❑ Other:

Measures Recommended to Applicant

❑ Drip Irrigation
❑ Plant palate
❑ Grading
❑ Pool and/or spa cover
❑ Dedicated irrigation meter
❑ Other:

Comments:

Selected Definitions:

[Agency Name, Address, Telephone#, Fax #]

OUTDOOR WATER USE EFFICIENCY CHECKLIST

ETo	Reference evapotranspiration means the quantity of water evaporated from a large field of four- to seven-inch tall, cool-season grass that is well watered. Reference evapotranspiration is used as the basis of estimating water budgets so that regional differences in climate can be accommodated.
SLA	Special Landscaped Area. Includes edible plants, areas irrigated with recycled water, surface water features using recycled water and areas dedicated to active play such as parks, sports fields, golf courses, and where turf provides a playing surface.
Professional	Professional is a "certified professional" or "authorized professional" that is a certified irrigation designer, a certified landscape irrigation auditor, a licensed landscape architect, a licensed landscape contractor, a licensed professional engineer, or any other person authorized by the state to design a landscape, an irrigation system, or authorized to complete a water budget, irrigation survey or irrigation audit.
Water Feature	A design element where open water performs an aesthetic or recreational function. Water features include ponds, lakes, waterfalls, fountains, artificial streams, spas, and swimming pools (where water is artificially supplied).

[Agency Name, Address, Telephone#, Fax #]

CITY OF BURLINGAME
PARKS & RECREATION DEPARTMENT
850 Burlingame Avenue Burlingame, California 94010
Telephone: (650) 558-7300 • Parks/Trees (650) 558-7330
Fax: (650) 696-7216

MODEL WATER EFFICIENCY LANDSCAPE ORDINANCE
~WATER EFFICIENT LANDSCAPE WORKSHEET~

(Appendix B)

This worksheet is filled out by the project applicant and it is a required element of the Landscape Documentation Package.

Reference Evapotranspiration (ETo) 42.8 Annual

Hydrozone # /Planting Description[a]	Plant Factor (PF)	Irrigation Method[b]	Irrigation Efficiency (IE)[c]	ETAF (PF/IE)	Landscape Area (sq. ft.)	ETAF x Area	Estimated Total Water Use (ETWU)[d]
Regular Landscape Areas							
				Totals	(A)	(B)	
Special Landscape Areas							
				1			
				1			
				1			
				Totals	(C)	(D)	
						ETWU Total	
				Maximum Allowed Water Allowance (MAWA)[e]			

[a]Hydrozone #/Planting Description
E.g
1.) front lawn
2.) low water use plantings
3.) medium water use planting

[b]Irrigation Method
overhead spray or drip

[c]Irrigation Efficiency
0.75 for spray head
0.81 for drip

***[d]ETWU* (Annual Gallons Required) =**
Eto x 0.62 x ETAF x Area
where 0.62 is a conversion factor that converts acre-inches per acre per year to gallons per square foot per year.

[e]MAWA (Annual Gallons Allowed) = *(Eto) (0.62) [(ETAF x LA) + ((1-ETAF) x SLA)]*
where 0.62 is a conversion factor that converts acre-inches per acre per year to gallons per year, LA is the total landscape area in square feet, SLA is the total special landscape area in square feet, and ETAF is .55 for residential areas and 0.45 for non-residential areas.

ETAF Calculations

Regular Landscape Areas

Total ETAF x Area	(B)
Total Area	(A)
Average ETAF	**B ÷ A**

Average ETAF for Regular Landscape Areas must be 0.55 or below for residential areas, and 0.45 or below for non-residential areas.

All Landscape Areas

Total ETAF x Area	(B+D)
Total Area	(A+C)
Sitewide ETAF	**(B+D) ÷ (A+C)**

APPARATUS ARCHITECTURE
4450 18th Street
San Francisco, CA 94114
c: (415) 703-6904
e: info@apparatus.com

LICENSED ARCHITECT
STUART D. HILLS
No. C24966
Renew 9-30-2027
STATE OF CALIFORNIA

RESIDENTIAL ADDITION
1611 WILLOW AVE
BURLINGAME, CA 94010
PARCEL NUMBER 028142350

OWNER:
VEENA DUBAL
J RYAN GILFOIL

date	NOV 17, 2025
scale	1/8" = 1'-0"
revis	
2	REVISION JUN 01, 2026
3	REVISION JUN 18, 2026
4	REVISION JUN 18, 2026

A0.5

- (N) WALL
- (E) WALL
- DEMO
- 10'-0" CEILING HT.
- FLOOR LVL. CHANGE

DEMOLITION CALCULATION			
(E) WALLS	SQFT	DEMO - SQFT	% - SQFT
(E) NORTH WALL SF :	551.2 SF		
(E) SOUTH WALL SF:	664 SF	366 SF	11%
(E) WEST WALL SF :	1,080.2 SF		
(E) EAST WALL SF :	1,167.3 SF		
TOTAL (E) EXTERIOR WALL :	3,462.7 SF	366 SF	11%

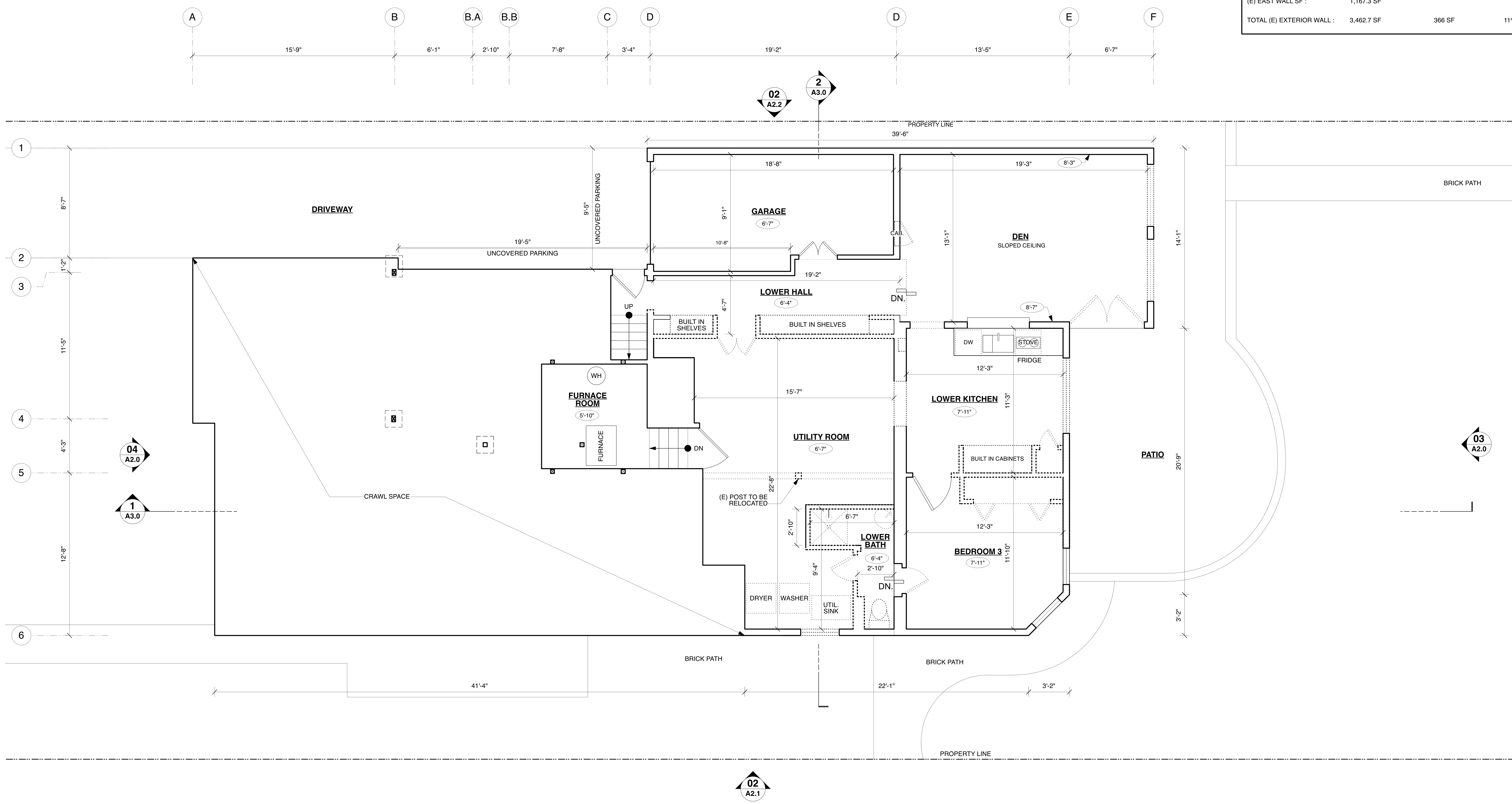

NORTH

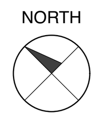

EXISTING / DEMO LOWER LEVEL FLOOR PLAN

t: (415) 703-0904
e: info@apparatus.com

4450 18th Street
San Francisco, CA 94114

APPARATUS ARCHITECTURE

LICENSED ARCHITECT
STUART D. HILLS
No. C24966
Renew 9-30-2027
STATE OF CALIFORNIA

RESIDENTIAL ADDITION
1611 WILLOW AVE
BURLINGAME, CA 94010
PARCEL NUMBER 028142350

OWNER:
VEENA DUBAL
J RYAN GILFOIL

date	NOV 17, 2025
scale	1/4" = 1'-0"
revis	
2	REVISION JUN 01, 2026
3	REVISION JUN 18, 2026
4	REVISION JUN 18, 2026

A1.0

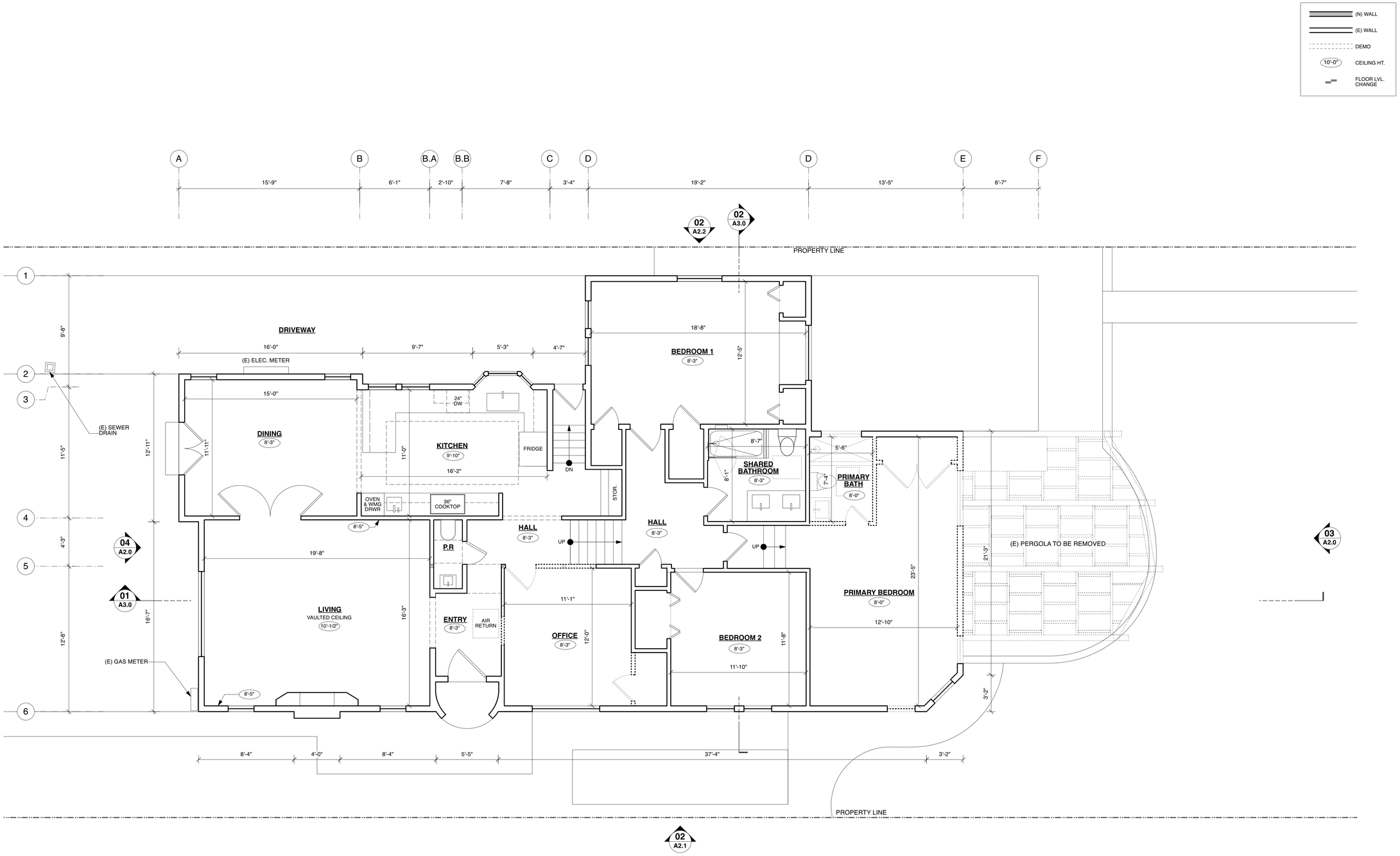

NORTH

EXISTING / DEMO MAIN LEVEL FLOOR PLAN

APPARATUS ARCHITECTURE
4459 19th Street
San Francisco, CA 94114
c: (415) 703-6984
e: info@apparatus.com

LICENSED ARCHITECT
STUART D. HILLS
No. C24966
Renew 9-30-2027
STATE OF CALIFORNIA

RESIDENTIAL ADDITION

OWNER:
VEENA DUBAL
J RYAN GILFOIL

1611 WILLOW AVE

BURLINGAME, CA 94010
PARCEL NUMBER 028142350

date	NOV 17, 2025
scale	1/4" = 1'-0"
revis	
2	REVISION JUN 01, 2026
3	REVISION JUN 18, 2026
4	REVISION JUN 18, 2026

A1.1

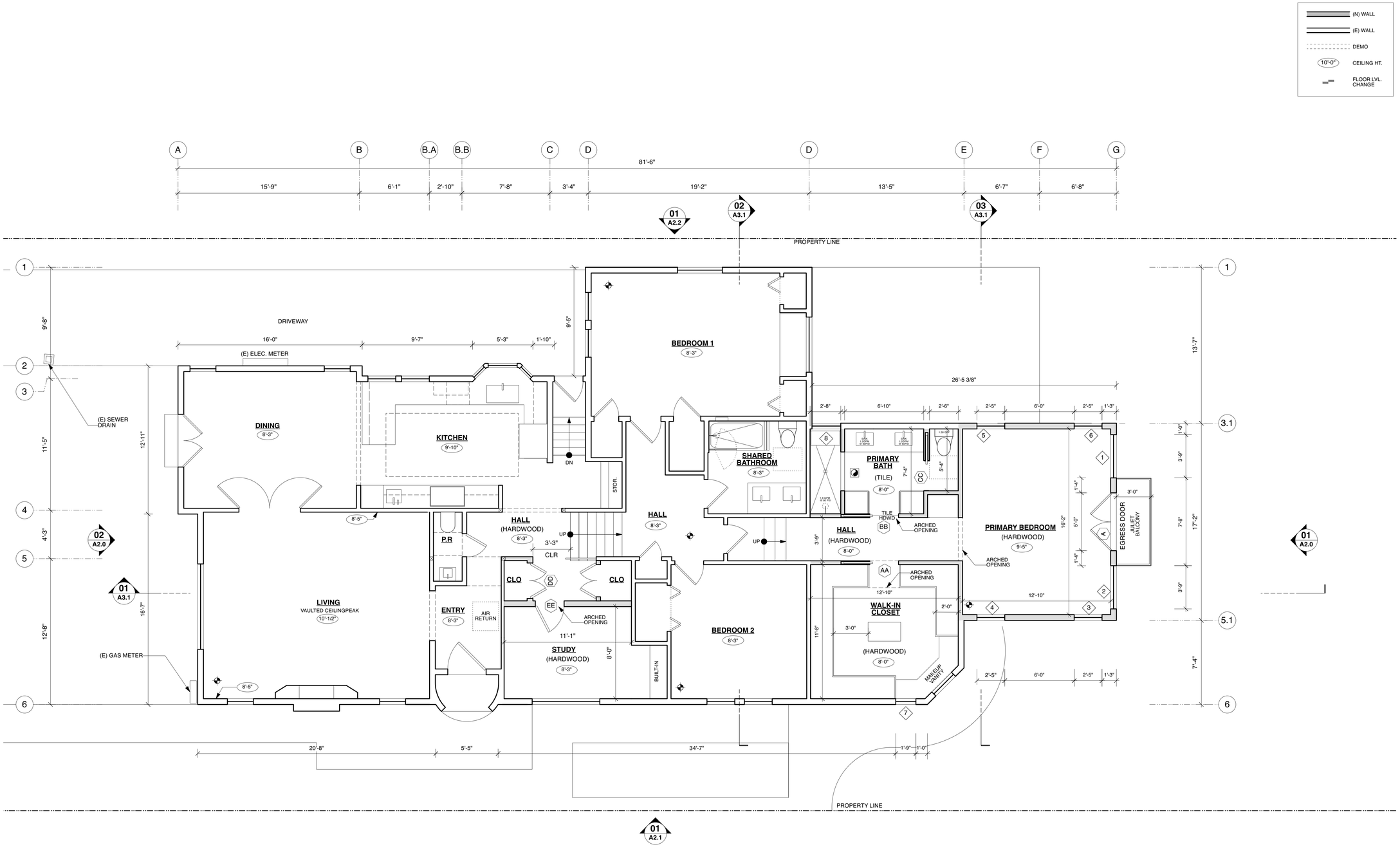

PROPOSED MAIN LEVEL FLOOR PLAN

APPARATUS ARCHITECTURE
c: (415) 703-6984
e: info@apparatus.com
4459 19th Street
San Francisco, CA 94114

LICENSED ARCHITECT STUART D. HILLS No. C24966 Renew. 9-30-2027 STATE OF CALIFORNIA

RESIDENTIAL ADDITION

OWNER: VEENA DUBAL J RYAN GILFOIL

1611 WILLOW AVE

BURLINGAME, CA 94010

PARCEL NUMBER 028142350

date	NOV 17, 2025
scale	1/4" = 1'-0"
revis	
2	REVISION JUN 01, 2026
3	REVISION JUN 18, 2026
4	REVISION JUN 18, 2026

A1.2

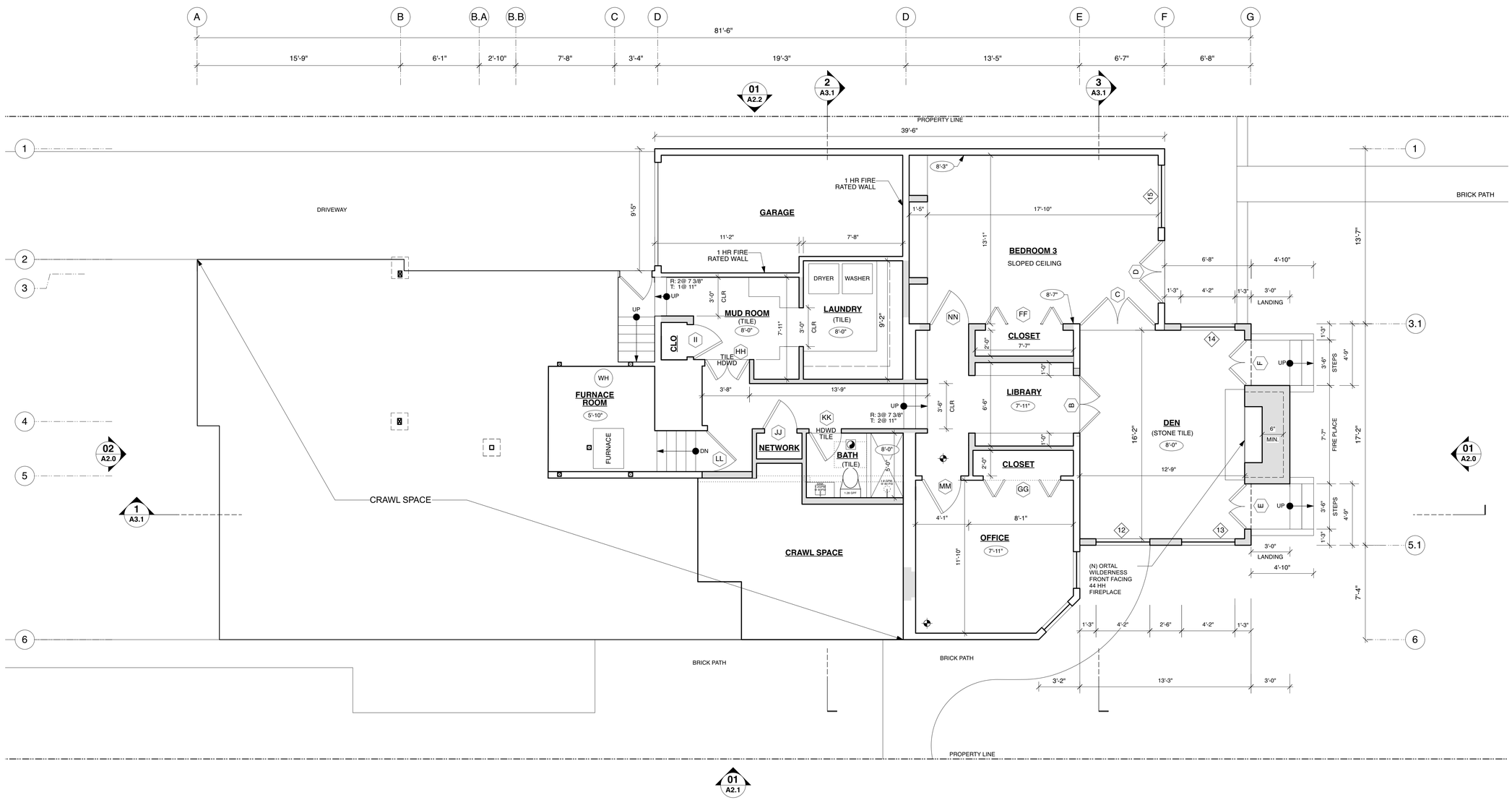

NORTH

PROPOSED LOWER LEVEL FLOOR PLAN

(N) WALL
(E) WALL
DEMO
10'-0" CEILING HT.
FLOOR LVL. CHANGE

APPARATUS ARCHITECTURE
4459 19th Street
San Francisco, CA 94114
c: (415) 703-6984
e: info@apparatus.com

LICENSED ARCHITECT
STUART D. HILLS
No. C24966
Renew 9-30-2027
STATE OF CALIFORNIA

RESIDENTIAL ADDITION

1611 WILLOW AVE
BURLINGAME, CA 94010
PARCEL NUMBER 028142350

OWNER:
VEENA DUBAL
J RYAN GILFOIL

date	NOV 17, 2025
scale	1/4" = 1'-0"
revis	
2	REVISION JUN 01, 2026
3	REVISION JUN 18, 2026
4	REVISION JUN 18, 2026

A1.3

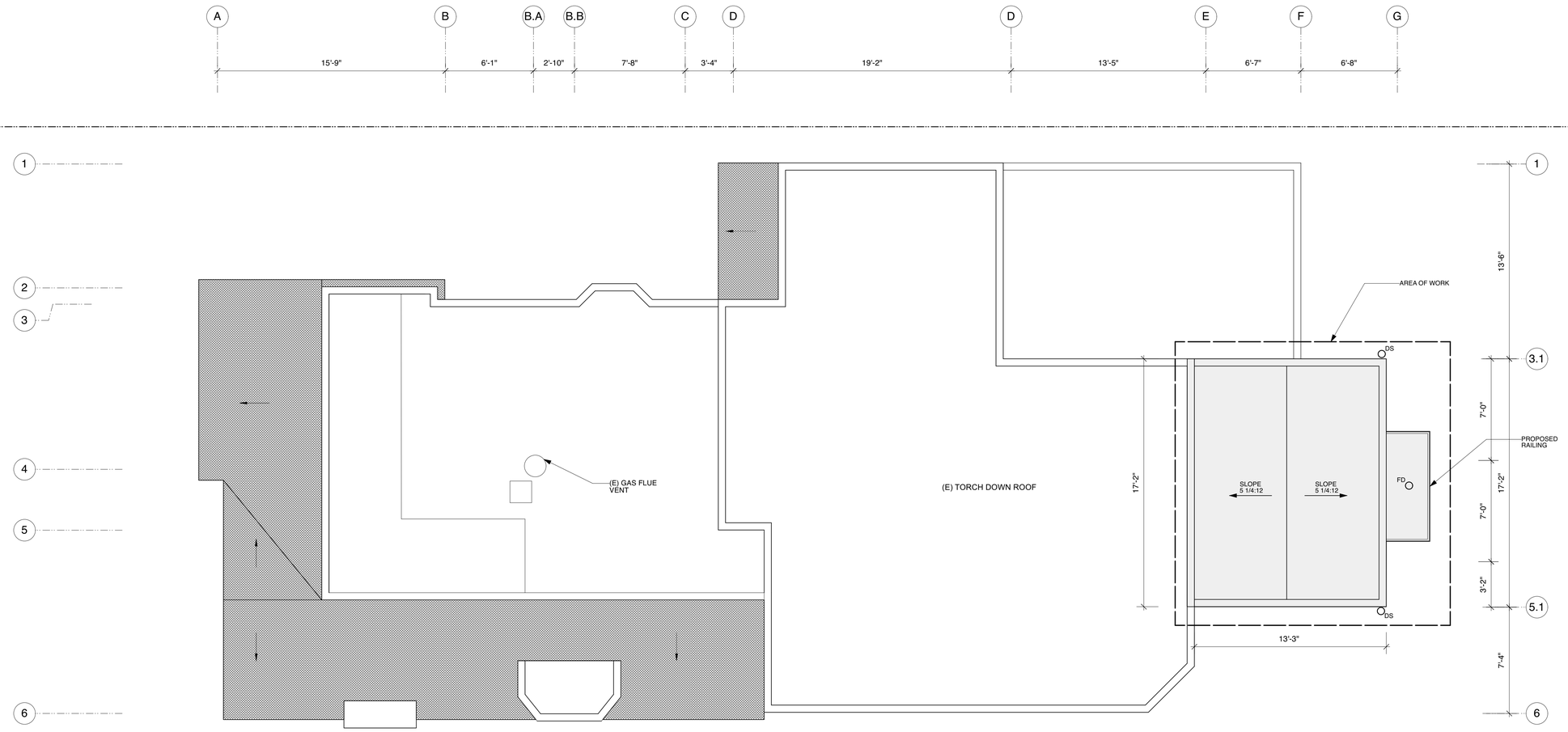

NORTH

PROPOSED ROOF PLAN

APPARATUS ARCHITECTURE
4459 19th Street
San Francisco, CA 94114
t: (415) 703-9594
e: info@apparatus.com

LICENSED ARCHITECT
STUART D. HILLS
No. C24966
Renew 9-30-2027
STATE OF CALIFORNIA

RESIDENTIAL ADDITION

OWNER:
VEENA DUBAL
J RYAN GILFOIL

1611 WILLOW AVE

BURLINGAME, CA 94010
PARCEL NUMBER 028142350

date	NOV 17, 2025
scale	1/4" = 1'-0"
revis	
2	REVISION JUN 01, 2026
3	REVISION JUN 18, 2026
4	REVISION JUN 18, 2026

A1.4

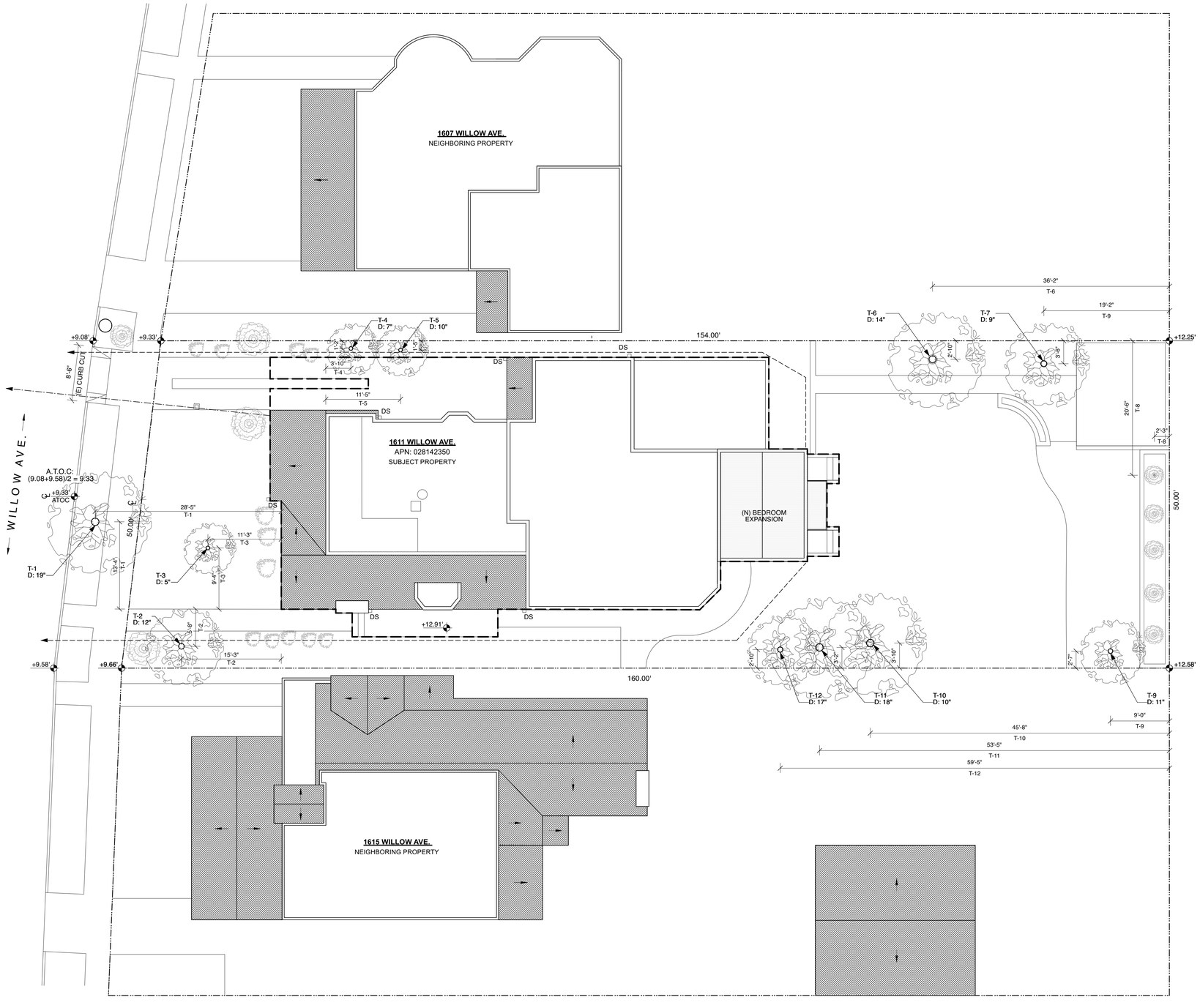

NORTH

TREE INVENTORY & ASSESSMENT TABLE

*TRUNK DIAMETERS OF OFFSITE TREES ARE VISUAL ESTIMATES

Tree #	Protected	Preserve/ Remove	Species (Common / Latin)	Trunk Diameter (in.)	Health	Structure	Qualifies as Required Landscape Tree
1	Yes/ Street	Preserve	Southern magnolia (Magnolia grandiflora)	18	Fair	Fair	
2	No	Preserve	Chinese saucer magnolia (Magnolia × soulangeana)	12.5	Good	Fair	Yes
3	No	Preserve	Red horse chestnut (Aesculus × carnea)	4	Good	Good	
4	No	Preserve	Pittosporum (Pittosporum undulatum)	6	Fair	Good	Yes
5	No	Preserve	Pineapple guava (Acca sellowiana)	10	Poor	Fair	
6	Yes	Preserve	Carolina cherry laurel (Prunus caroliniana)	14.8	Fair	Fair	Yes
7	No	Preserve	Loquat (Eriobotrya japonica)	8.5	Poor	Poor	
9	No	Preserve	Prunus sp.	8	Fair	Fair	
10	No	Preserve	Carolina cherry laurel (Prunus caroliniana)	7.5	Fair	Poor	Yes
11	No	Preserve	Chinese elm (Ulmus parvifolia)	12.7	Good	Fair	Yes
12	No	Preserve	Chinese elm (Ulmus parvifolia)	13.2	Good	Fair	Yes

PROPOSED LANDSCAPE, IRRIGATION PLAN AND IRRIGATION CALCS.

APPARATUS ARCHITECTURE
4459 18th Street
San Francisco, CA 94114
c: (415) 703-6904
e: info@apparatus.com

LICENSED ARCHITECT
STUART D. HILLS
No. C24966
Renew. 9-30-2027
STATE OF CALIFORNIA

RESIDENTIAL ADDITION

1611 WILLOW AVE

BURLINGAME, CA 94010
PARCEL NUMBER 028142350

OWNER:
VEENA DUBAL
J RYAN GILFOIL

date	NOV 17, 2025
scale	1/8" = 1'-0"
revis	
2	REVISION JUN 01, 2026
3	REVISION JUN 18, 2026
4	REVISION JUN 18, 2026

A1.5

HEARTWOOD
CONSULTING ARBORISTS

PROJECT ARBORIST
MATTHEW FRIED - ISA NO. MA-4851B
matthew@heartwoodarborists.com
650-542-8733

REFER TO SHEET T-3 FOR COMPLETE TREE PROTECTION REQUIREMENTS

LEGEND

- PROTECTED TREE
- NON-PROTECTED TREE
- TREE (REMOVE)
- TREE PROTECTION FENCE

TREE INVENTORY & ASSESSMENT TABLE

*TRUNK DIAMETERS OF OFFSITE TREES ARE VISUAL ESTIMATES

Tree #	Protected	Preserve/ Remove	Species (Common / Latin)	Trunk Diameter (in.)	Health	Structure	Qualifies as Required Landscape Tree
1	Yes/ Street	Preserve	Southern magnolia (Magnolia grandiflora)	18	Fair	Fair	
2	No	Preserve	Chinese saucer magnolia (Magnolia × soulangeana)	12.5	Good	Fair	Yes
3	No	Preserve	Red horse chestnut (Aesculus × carnea)	4	Good	Good	
4	No	Preserve	Pittosporum (Pittosporum undulatum)	6	Fair	Good	Yes
5	No	Preserve	Pineapple guava (Acca sellowiana)	10	Poor	Fair	
6	Yes	Preserve	Carolina cherry laurel (Prunus caroliniana)	14.8	Fair	Fair	Yes
7	No	Preserve	Loquat (Eriobotrya japonica)	8.5	Poor	Poor	
9	No	Preserve	Prunus sp.	8	Fair	Fair	
10	No	Preserve	Carolina cherry laurel (Prunus caroliniana)	7.5	Fair	Poor	Yes
11	No	Preserve	Chinese elm (Ulmus parvifolia)	12.7	Good	Fair	Yes
12	No	Preserve	Chinese elm (Ulmus parvifolia)	13.2	Good	Fair	Yes

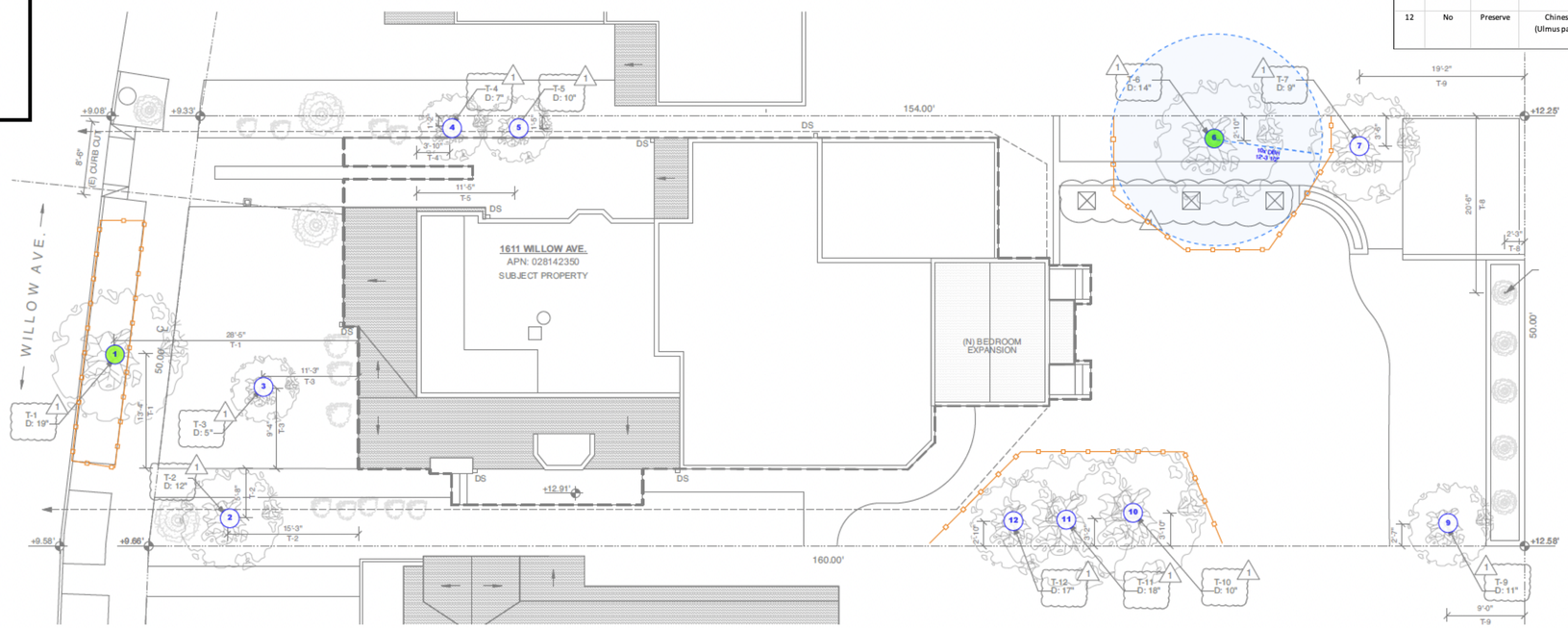

NORTH

HEARTWOOD
CONSULTING ARBORISTS
266 S Hill Blvd. San Francisco, CA 94112
650.542.8733 w/heartwoodarborists.com

1611 WILLOW AVENUE
BURLINGAME, CALIFORNIA

Revised
04/30/2026 11:55:54 AM

SCALE: AS SHOWN

TREE PROTECTION PLAN
SHEET 1 of 3

A1.6

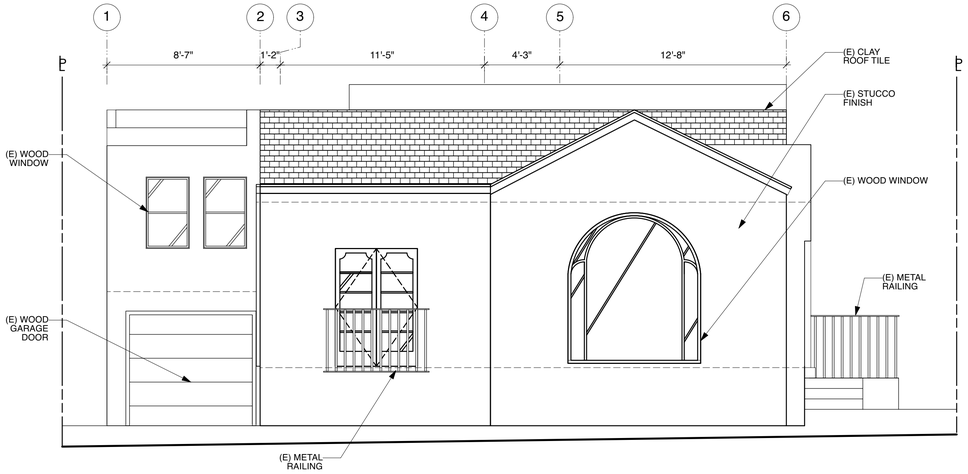

04 - EXISTING NORTH ELEVATIONS

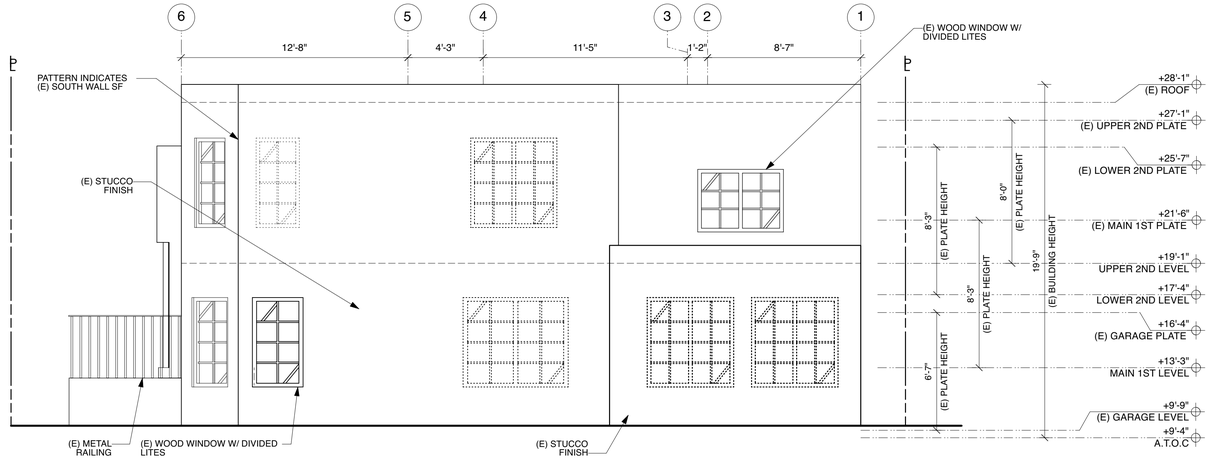

03 - EXISTING SOUTH ELEVATIONS

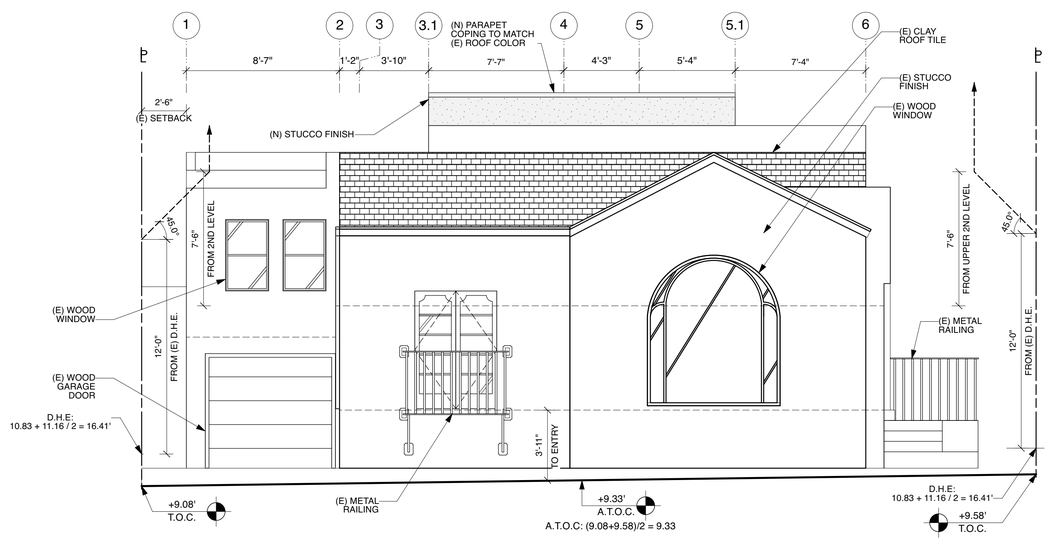

02 - PROPOSED NORTH ELEVATIONS

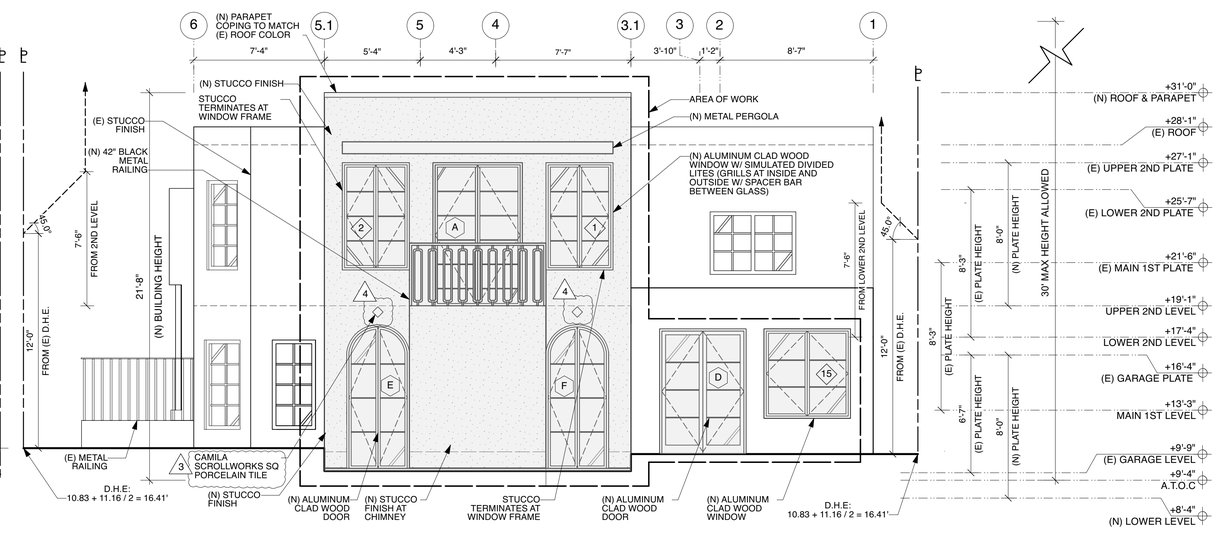

01 - PROPOSED SOUTH ELEVATIONS

EXISTING AND PROPOSED ELEVATIONS

APPARATUS ARCHITECTURE
4459 19th Street
San Francisco, CA 94114
c: (415) 703-6984
e: info@apparatus.com

LICENSED ARCHITECT
STUART D. HILLS
No. C24966
Renew 9-30-2027
STATE OF CALIFORNIA

RESIDENTIAL ADDITION

1611 WILLOW AVE
BURLINGAME, CA 94010
PARCEL NUMBER 028142350

OWNER:
VEENA DUBAL
J RYAN GILFOIL

date	NOV 17, 2025
scale	1/4" = 1'-0"
revis	
2	REVISION JUN 01, 2026
3	REVISION JUN 18, 2026
4	REVISION JUN 18, 2026

A2.0

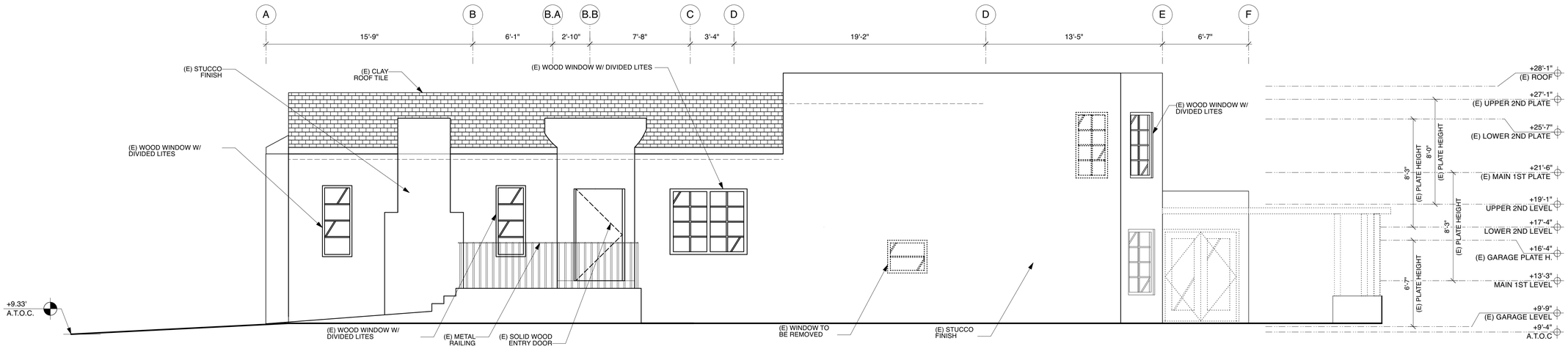

02 - EXISTING WEST ELEVATIONS

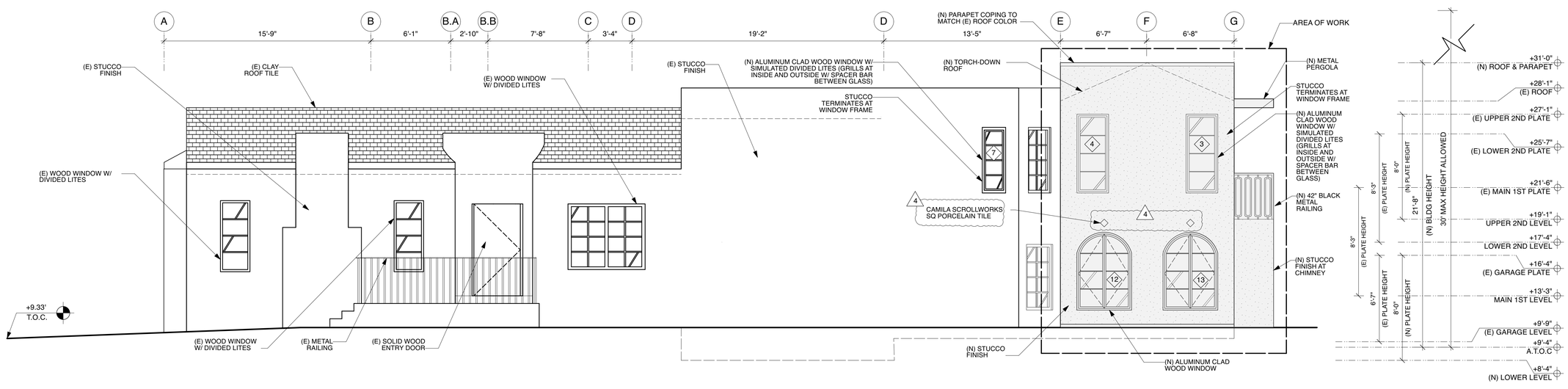

01 - PROPOSED WEST ELEVATIONS

EXISTING AND PROPOSED ELEVATIONS

APPARATUS ARCHITECTURE
4459 19th Street
San Francisco, CA 94114
t: (415) 703-9504
e: info@apparatus.com

LICENSED ARCHITECT
STUART D. HILLS
No. C24966
Renew. 9-30-2027
STATE OF CALIFORNIA

RESIDENTIAL ADDITION

1611 WILLOW AVE

BURLINGAME, CA 94010

PARCEL NUMBER 028142350

OWNER:
VEENA DUBAL
J RYAN GILFOIL

date	NOV 17, 2025
scale	1/4" = 1'-0"
revis	
2	REVISION JUN 01, 2026
3	REVISION JUN 18, 2026
4	REVISION JUN 18, 2026

A2.1

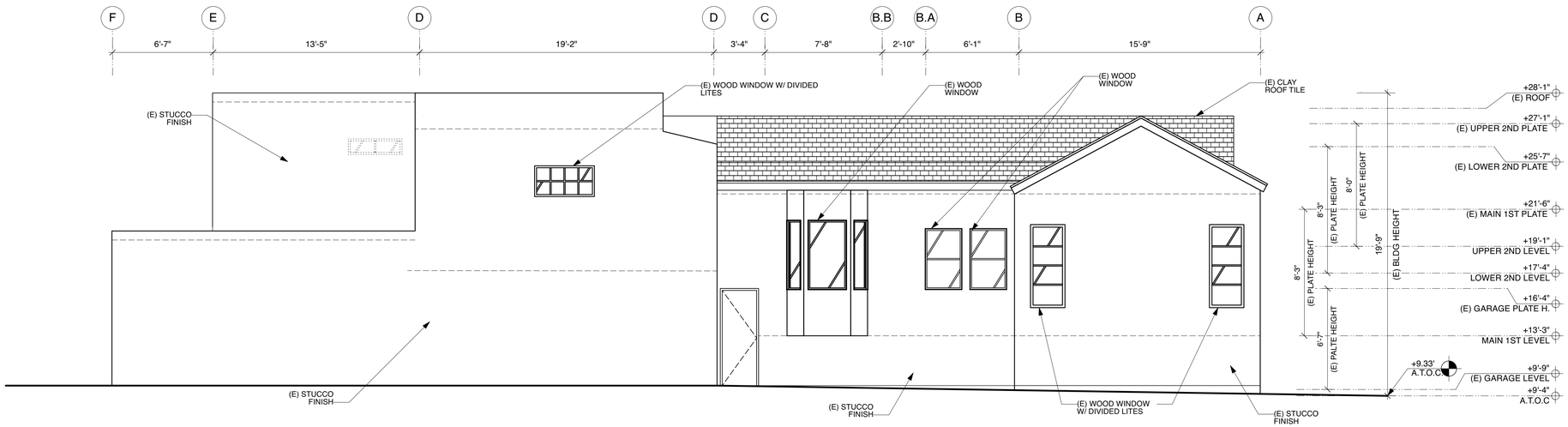

02 - EXISTING EAST ELEVATIONS

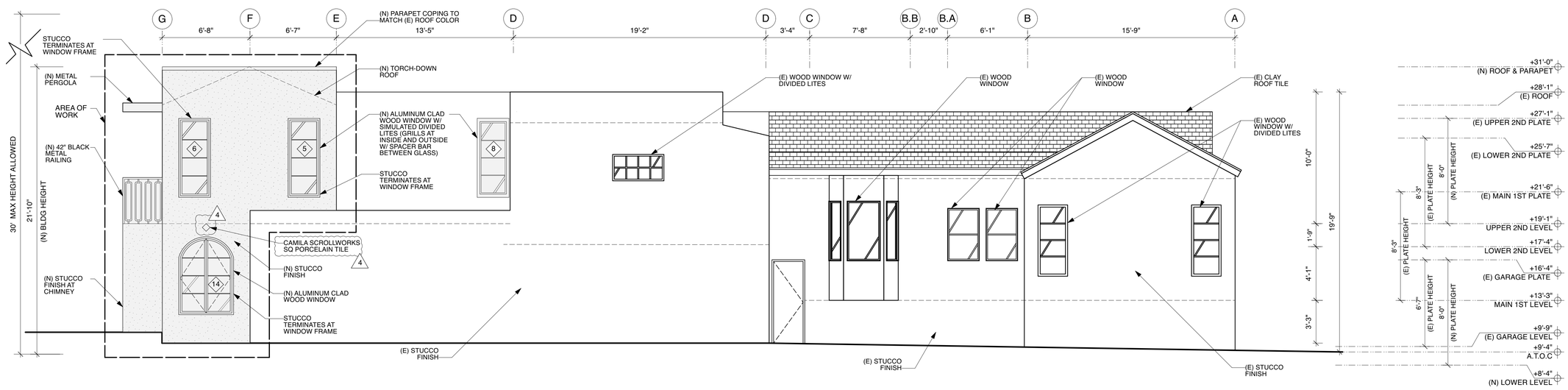

01 - PROPOSED EAST ELEVATIONS

EXISTING AND PROPOSED ELEVATIONS

APPARATUS ARCHITECTURE
4459 19th Street
San Francisco, CA 94114
c: (415) 703-6984
e: info@apparatus.com

LICENSED ARCHITECT
STUART D. HILLS
No. C24966
Renew. 9-30-2027
STATE OF CALIFORNIA

RESIDENTIAL ADDITION

OWNER:
VEENA DUBAL
J RYAN GILFOIL

1611 WILLOW AVE
BURLINGAME, CA 94010
PARCEL NUMBER 028142350

date	NOV 17, 2025
scale	1/4" = 1'-0"
revis	
2	REVISION JUN 01, 2026
3	REVISION JUN 18, 2026
4	REVISION JUN 18, 2026

A2.2

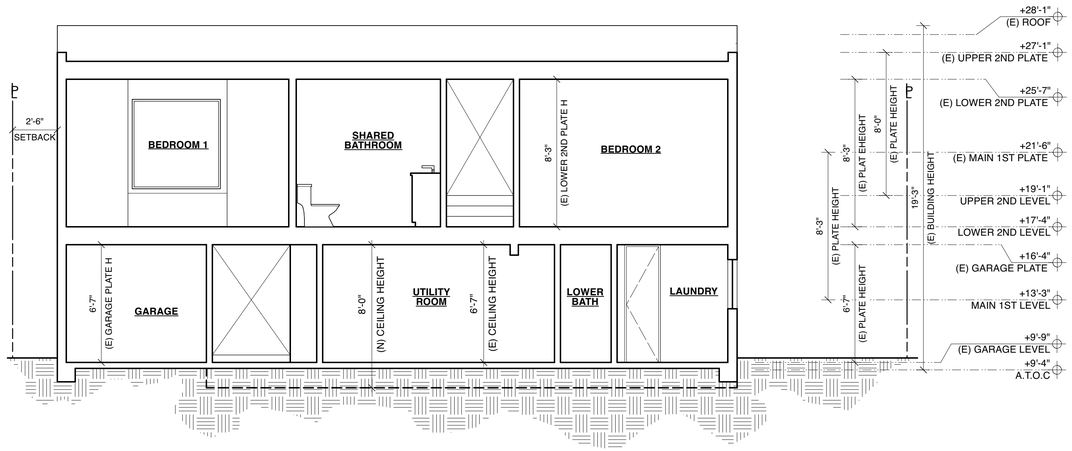

02 EXISTING SECTION

x

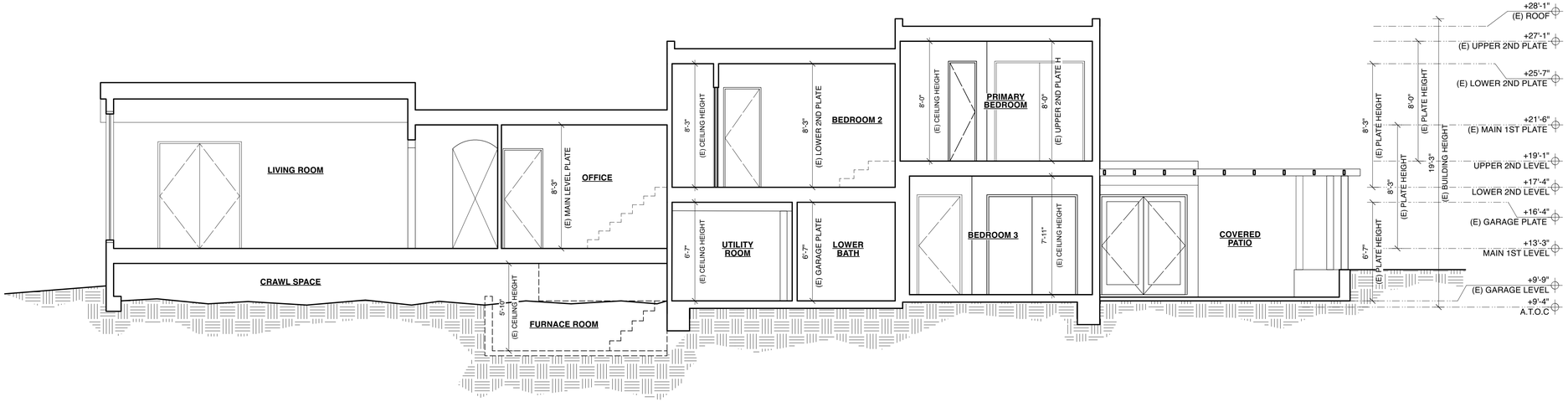

01 EXISTING SECTION

APPARATUS ARCHITECTURE
4459 18th Street
San Francisco, CA 94114
c: (415) 703-6984
e: info@apparatus.com

LICENSED ARCHITECT
STUART D. HILLS
No. C24966
Renew 9-30-2027
STATE OF CALIFORNIA

RESIDENTIAL ADDITION

OWNER:
VEENA DUBAL
J RYAN GILFOIL

1611 WILLOW AVE

BURLINGAME, CA 94010
PARCEL NUMBER 028142350

date	NOV 17, 2025
scale	1/4" = 1'-0"
revis	
2	REVISION JUN 01, 2026
3	REVISION JUN 18, 2026
4	REVISION JUN 18, 2026

A3.0

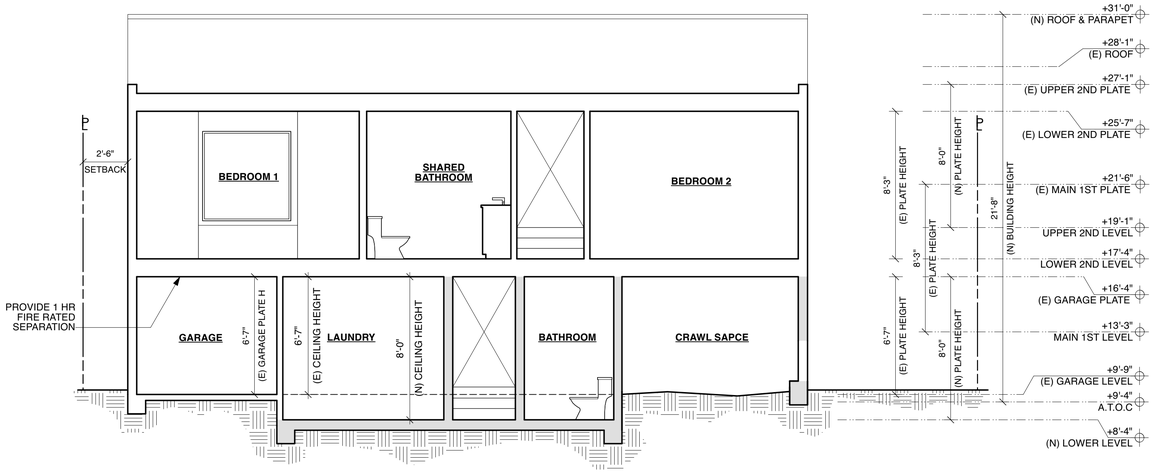

02 PROPOSED SECTION

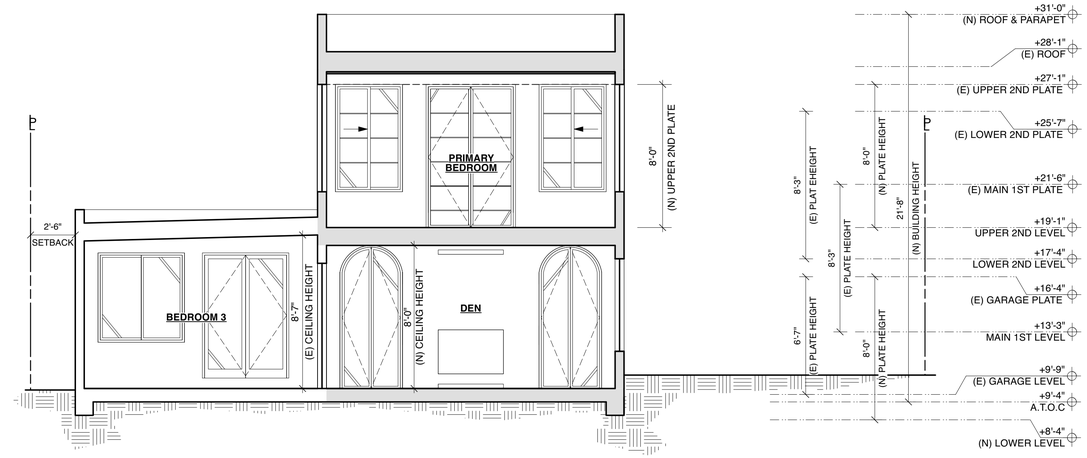

03 PROPOSED SECTION

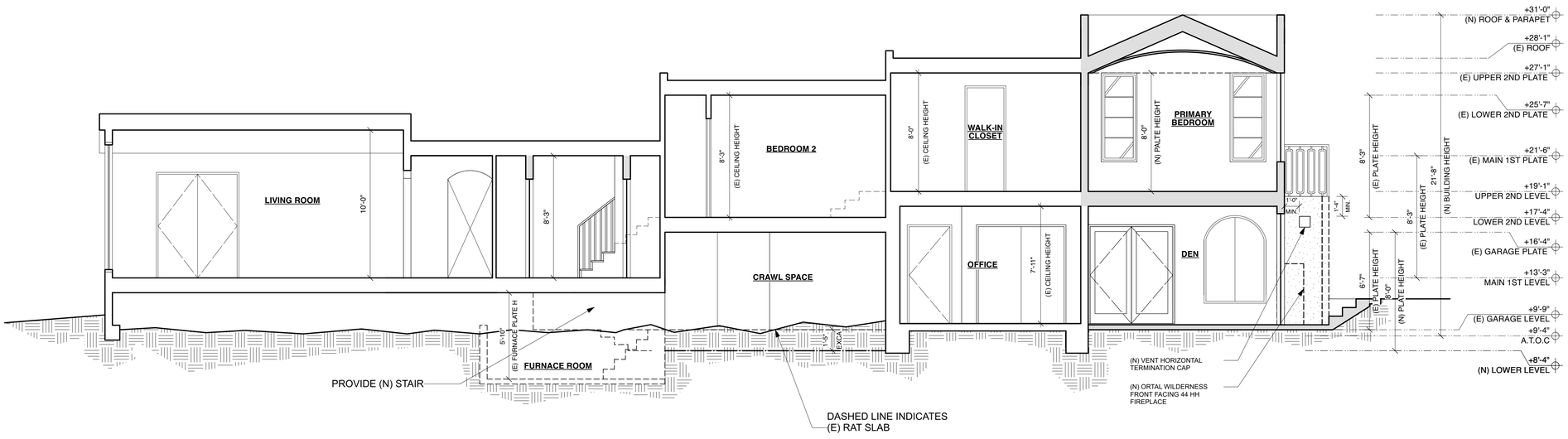

01 PROPOSED SECTION

c (415) 703-6984
e: info@apparatus.com

4459 19th Street
San Francisco, CA 94114

APPARATUS ARCHITECTURE

LICENSED ARCHITECT
STUART D. HILLS
No. C24966
Renew 9-30-2027
STATE OF CALIFORNIA

RESIDENTIAL ADDITION

1611 WILLOW AVE
BURLINGAME, CA 94010
PARCEL NUMBER 028142350

OWNER:
VEENA DUBAL
J RYAN GILFOIL

date	NOV 17, 2025
scale	1/4" = 1'-0"
revis	
2	REVISION JUN 01, 2026
3	REVISION JUN 18, 2026
4	REVISION JUN 18, 2026

A3.1

MATERIAL TRANSITION AT REAR

NEIGHBORHOOD CONTEXT

"EXAMPLE HOUSES" : REFER TO THE GROUP OF HOSUES THAT REPRESENT THE POSITIVE NEIGHBORHOOD PATTERS (N.D.G. PAGE 7)

THE PROPSOED ADDITIONS IS "CONSISTENT WITH THE NEIGHBORHOOD CHARACTER AND THAT OF THE EXAMPLE HOUSES IN THE NEIGHBORHOOD." (N.D.G. PAGE 7)

NEIGHBORHOOD CONTEXT

PROPOSED REAR VIEW

ADDITION EMPLOYS THE VOCBULARY OF SLEEPING PORCHES FEATURED ON HOMES OF THIS ERA WITH A CHANGE IN MATERIAL AND A DEN BELOW

ARCHED OPENINGS ON THE DAN REPEAT THE GEOMETRY OF THE EXISTING RESIDENCE AND ADJACENT HOMES - SEE NEIGHBORHOOD DESIGN GUIDEBOOK PAGE 2, PAGE 7

PROPOSED REAR AXON

THE ADDITION IS PLACED IN THE CENTER OF THE REAR YARD TO PROVIDE CLEARANCE FROM PROPERTY LINES AND A SENSE OF SEPARATION. PAGE 28

4

PROPOSED TILE DETAIL

PROPOSED REAR BIRDS EYE

4

FRONT STREET VIEW

EXISTING WEST SIDE ELEVATION

EXISTING REAR ELEVATION

01 PROPOSED RENDERS AND PLANNING GUIDELINE COMPLIANCE

t: (415) 703-0904
e: info@apparatus.com

4450 18th Street
San Francisco, CA 94114

APPARATUS ARCHITECTURE

LICENSED ARCHITECT
STUART D. HILLS
No. C24966
Renew 9-30-2027
STATE OF CALIFORNIA

RESIDENTIAL ADDITION

OWNER:
VEENA DUBAL
J RYAN GILFOIL

1611 WILLOW AVE
BURLINGAME, CA 94010
PARCEL NUMBER 028142350

date	NOV 17, 2025
scale	1/4" = 1'-0"
revis	
2	REVISION JUN 01, 2026
3	REVISION JUN 18, 2026
4	REVISION JUN 18, 2026

A3.2

INTERIOR DOOR SCHEDULE

NO.	LOCATION	FRAME SIZE	TYPE	LOCK TYPE	MODEL	MATERIAL	NOTES
AA	WALK-IN CLOSET	30" W x 84" H	PORCKET	PASSAGE	SC / PC	WOOD	
BB	PRIMARY BATH	30" W x 84" H	POCKET	PRIVACY	SC / PC	WOOD	
CC	PRIMARY BATH	30" W x 84" H	POCKET	PRIVACY	SC / PC	WOOD	
DD	HALL CLOSET	37" W x 84" H	DOUBLE SWING	PASSAGE	SC / PC	WOOD	
EE	STUDY	30" W x 84" H	SWING	PRIVACY	SC / PC	WOOD	
FF	BEDROOM 3 CLO	72" W x 84" H	BI-FOLD	PASSAGE	SC / PC	WOOD	
GG	OFFICE CLOSET	72" W x 84" H	BI-FOLD	PASSAGE	SC / PC	WOOD	
HH	MUDROOM	42" W x 84" H	DOUBLE SWING	PASSAGE	SC / PC	WOOD	
II	MUDROOM CLO	30" W x 84" H	SWING	PASSAGE	SC / PC	WOOD	
JJ	NETWORK	30" W x 84" H	SWING	PASSAGE	SC / PC	WOOD	
KK	BATHROOM	30" W x 84" H	SWING	PRIVACY	SC / PC	WOOD	
LL	FURNACE ROOM	38" W x 84" H	SWING	PASSAGE	SC / PC	WOOD	1 HR FIRE RATED DOOR
MM	OFFICE	36" W x 84" H	SWING	PRIVACY	SC / PC	WOOD	
NN	BEDROOM 3	36" W x 84" H	SWING	PRIVACY	SC / PC	WOOD	

ALL GLAZING IS TEMPERED

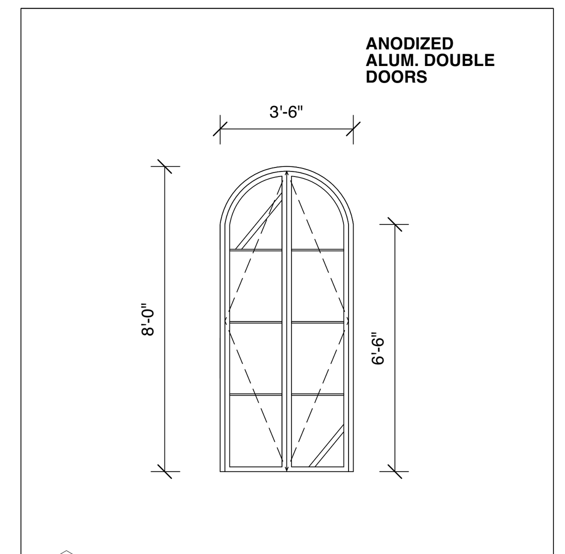

E DEN (EXTERIOR VIEW)

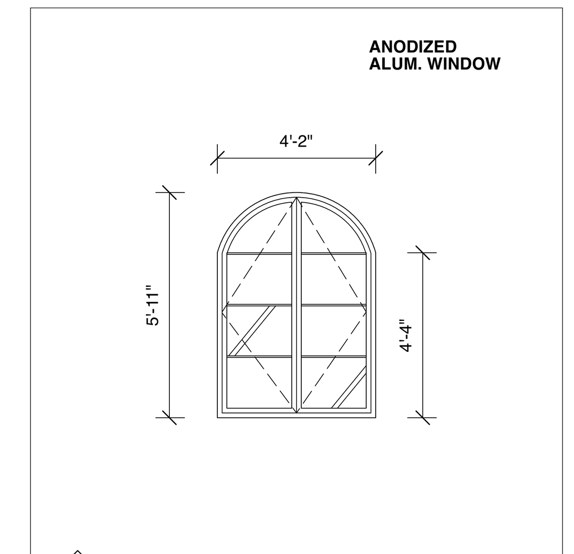

13 DEN (EXTERIOR VIEW)

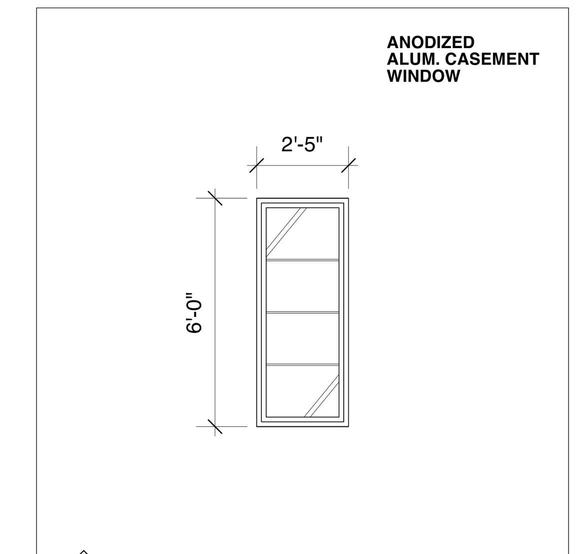

5 PRIMARY BEDROOM (EXTERIOR VIEW)

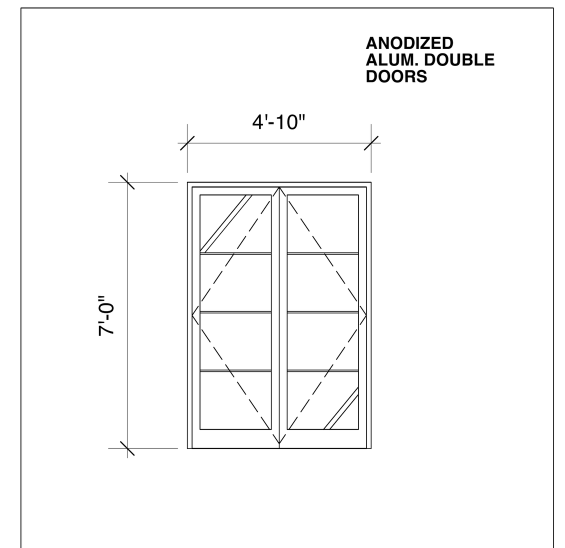

D BEDROOM 3 (EXTERIOR VIEW)

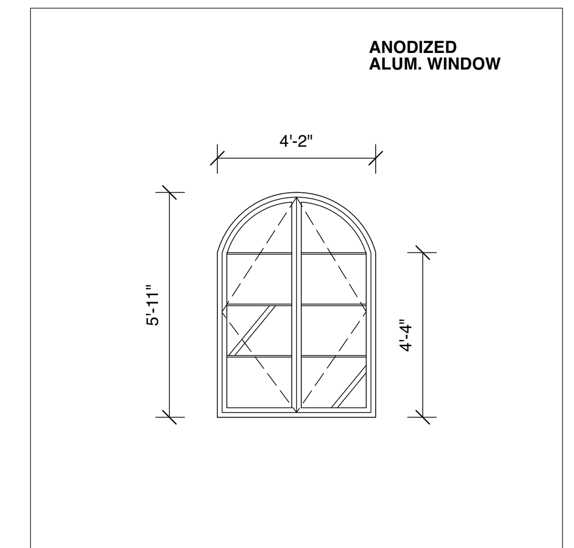

12 DEN (EXTERIOR VIEW)

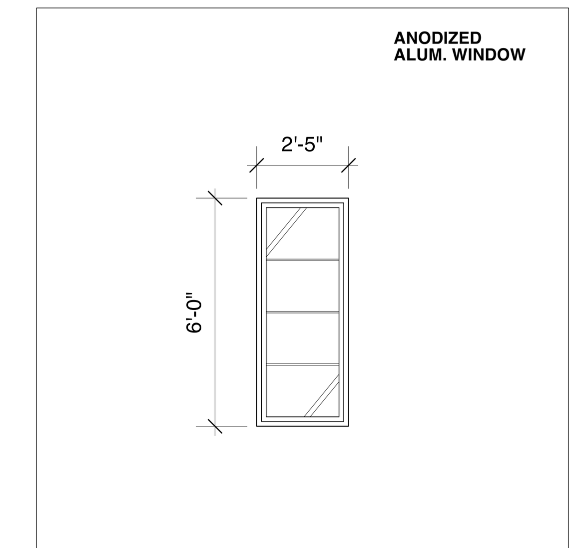

4 PRIMARY BEDROOM (EXTERIOR VIEW)

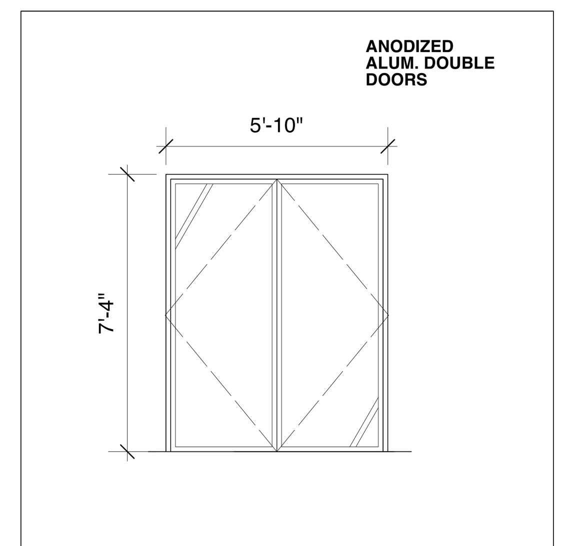

C BEDROOM 3 (EXTERIOR VIEW)

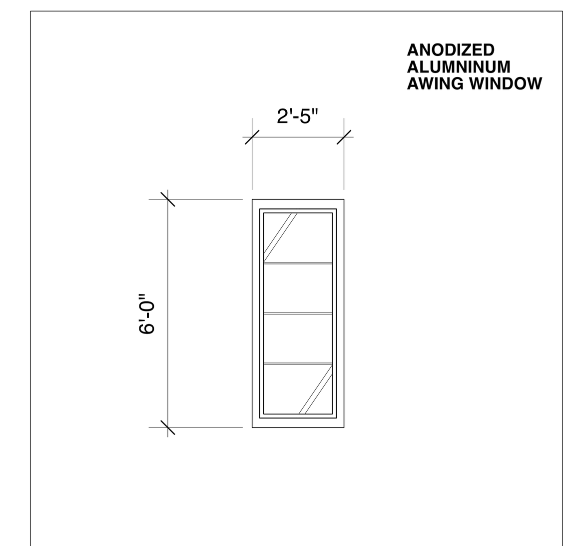

8 PRIMARY BATH (EXTERIOR VIEW)

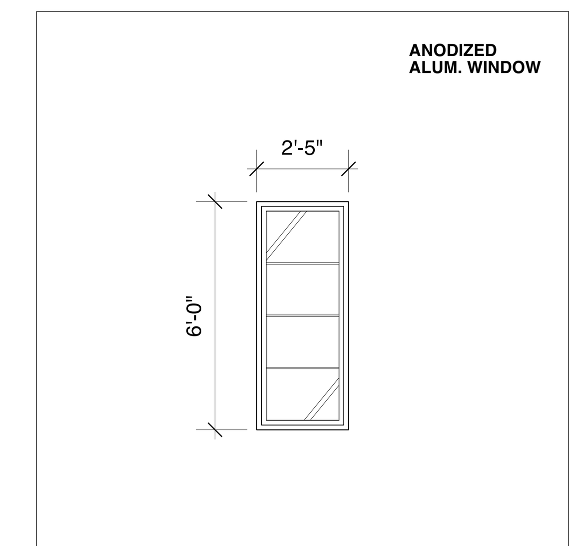

3 PRIMARY BEDROOM (EXTERIOR VIEW)

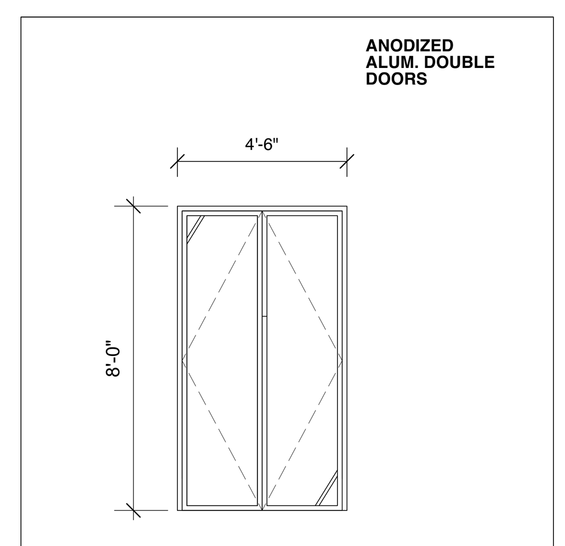

B LIBRARY (EXTERIOR VIEW)

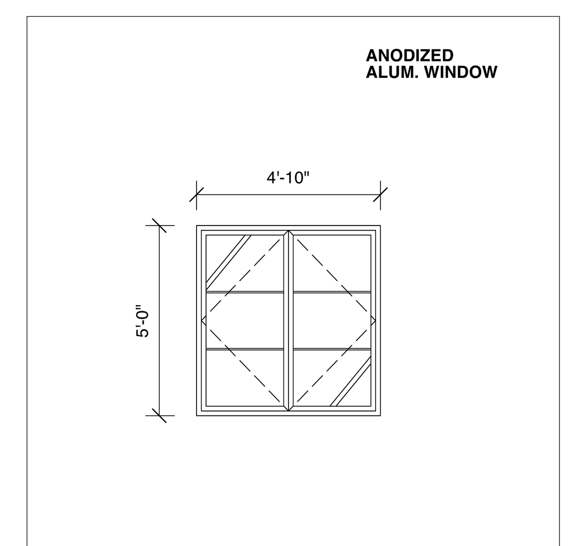

15 BEDROOM 3 (EXTERIOR VIEW)

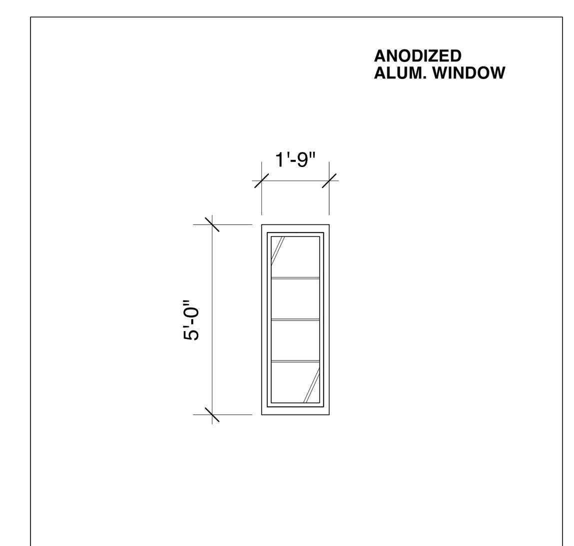

7 WALK-IN CLOSET (EXTERIOR VIEW)

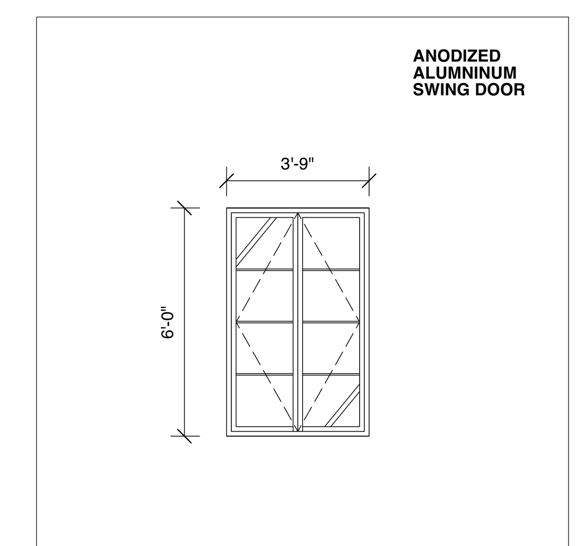

2 PRIMARY BEDROOM (EXTERIOR VIEW)

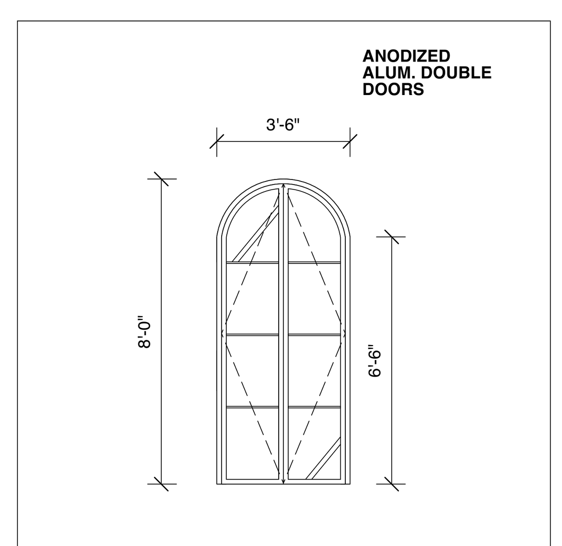

F DEN (EXTERIOR VIEW)

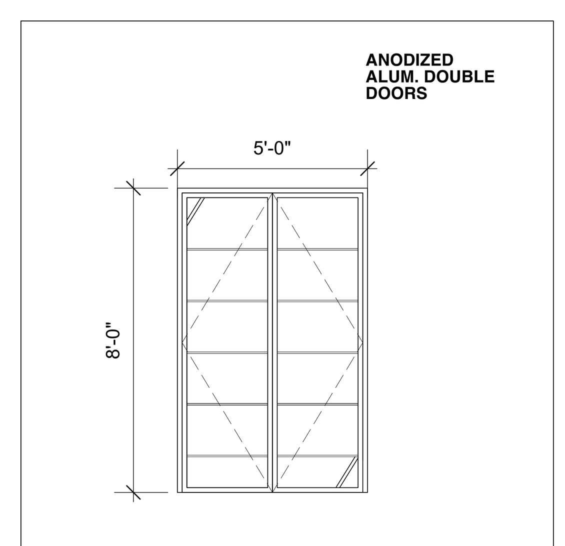

A PRIMARY BEDROOM (EXTERIOR VIEW)

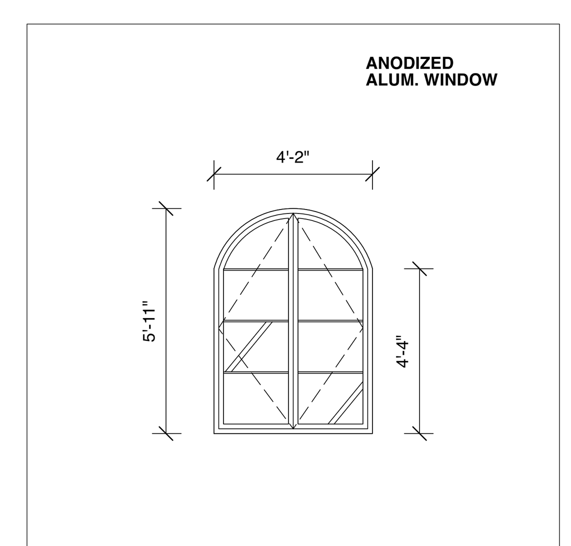

14 DEN (EXTERIOR VIEW)

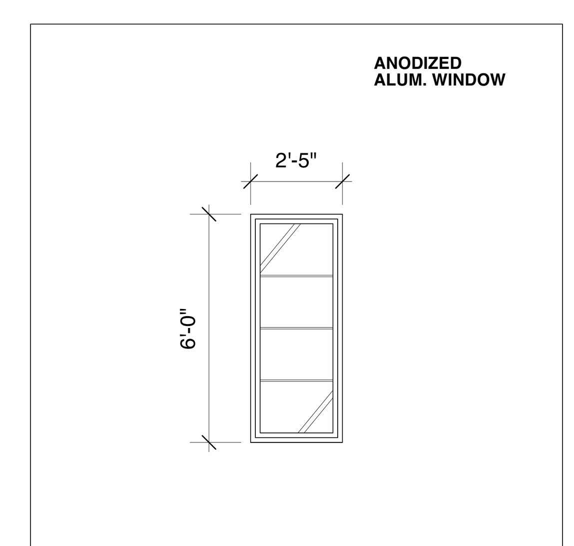

6 PRIMARY BEDROOM (EXTERIOR VIEW)

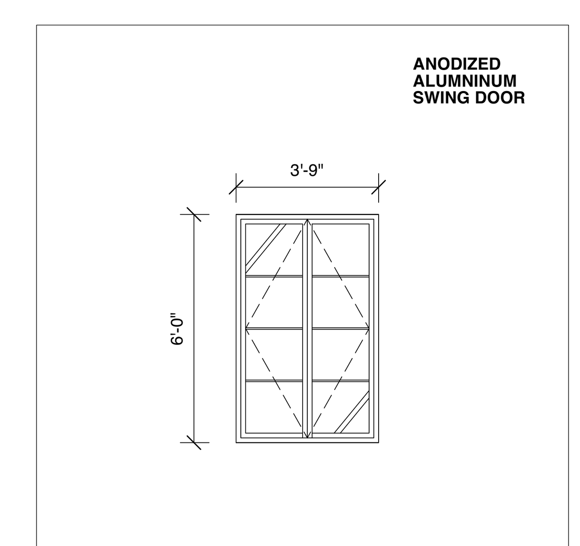

1 PRIMARY BEDROOM (EXTERIOR VIEW)

t: (415) 703-0904
e: info@apparatus.com

4450 18th Street
San Francisco, CA 94114

APPARATUS ARCHITECTURE

LICENSED ARCHITECT
STUART D. HILLS
No. C24966
Renew 6-30-2027
STATE OF CALIFORNIA

RESIDENTIAL ADDITION
1611 WILLOW AVE
BURLINGAME, CA 94010
PARCEL NUMBER 028142350

OWNER:
VEENA DUBAL
J RYAN GILFOIL

date	NOV 17, 2025
scale	1/2" = 1'-0"
revis	
2	REVISION JUN 01, 2026
3	REVISION JUN 18, 2026
4	REVISION JUN 18, 2026

A4.0

WINDOW AND DOOR SCHEDULE

ORTAL
YOUR LIFE. YOUR FIRE

Wilderness 44HH FR DG

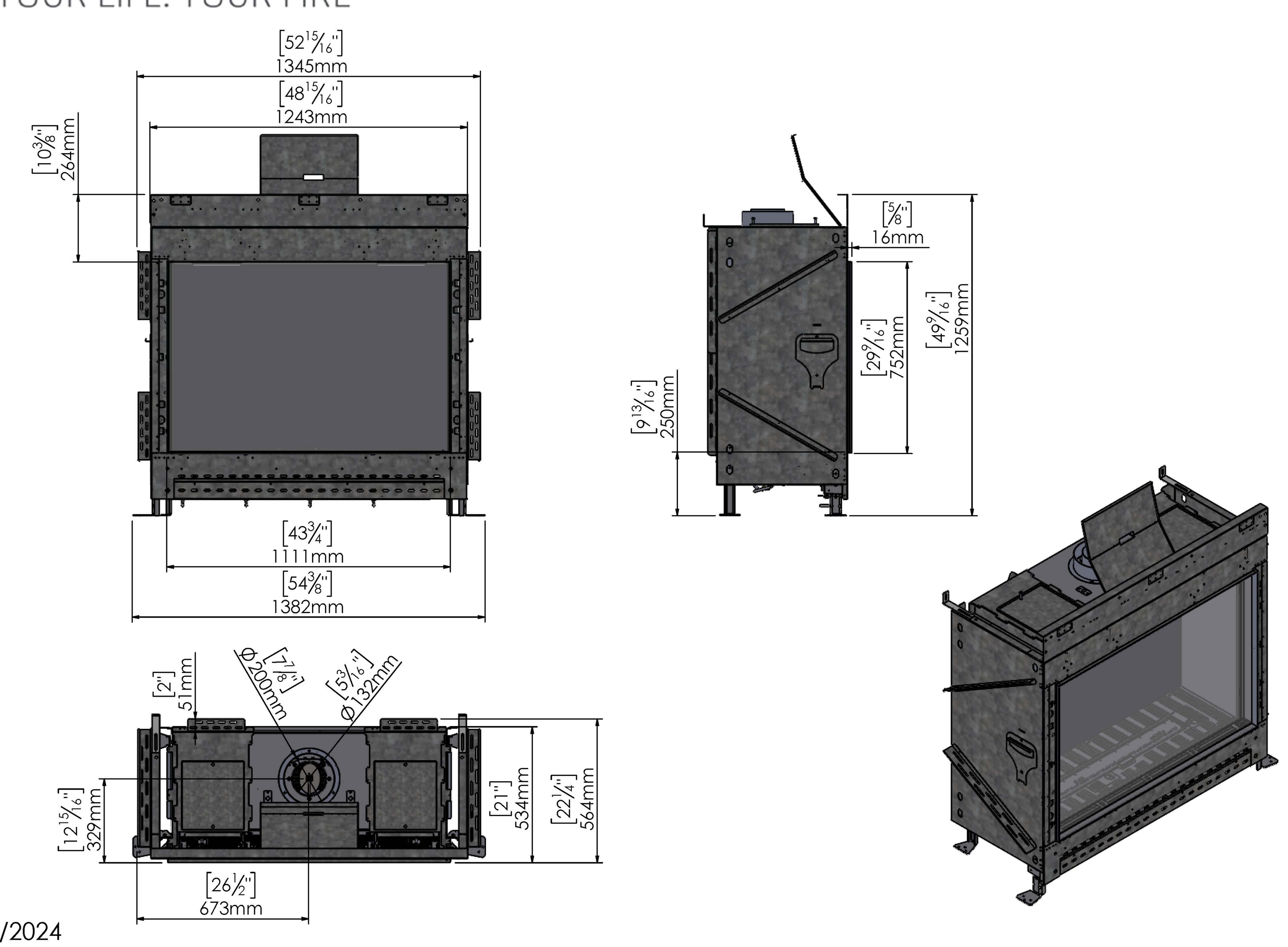

9/11/2024

Framing Information: 44HH Front (Screen & Double Glass)

ORTAL
YOUR LIFE. YOUR FIRE

Framing Dimensions

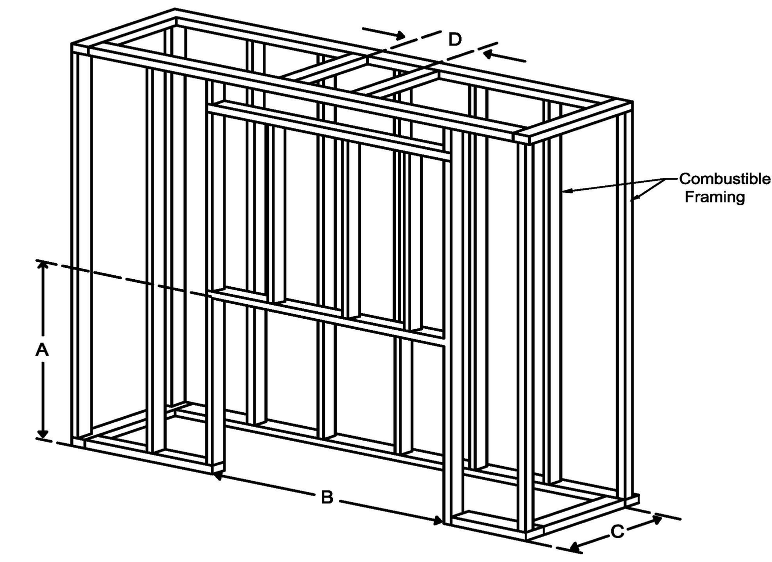

Model	A	B	C	D
44HH Front	49 1/2"	48 15/16"	21 5/8"	Refer to Vent Manufacturer's Firestop Dimensions

Note : 1. Drawings are not to Scale
2. All dimensions in inches
3. No weight can be transferred to the fireplace. ALL FRAMING MUST BE SELF-SUPPORTED.

Page 1 of 3

Framing Information: 44HH Front (Screen & Double Glass)

ORTAL
YOUR LIFE. YOUR FIRE

Fireplace Dimensions

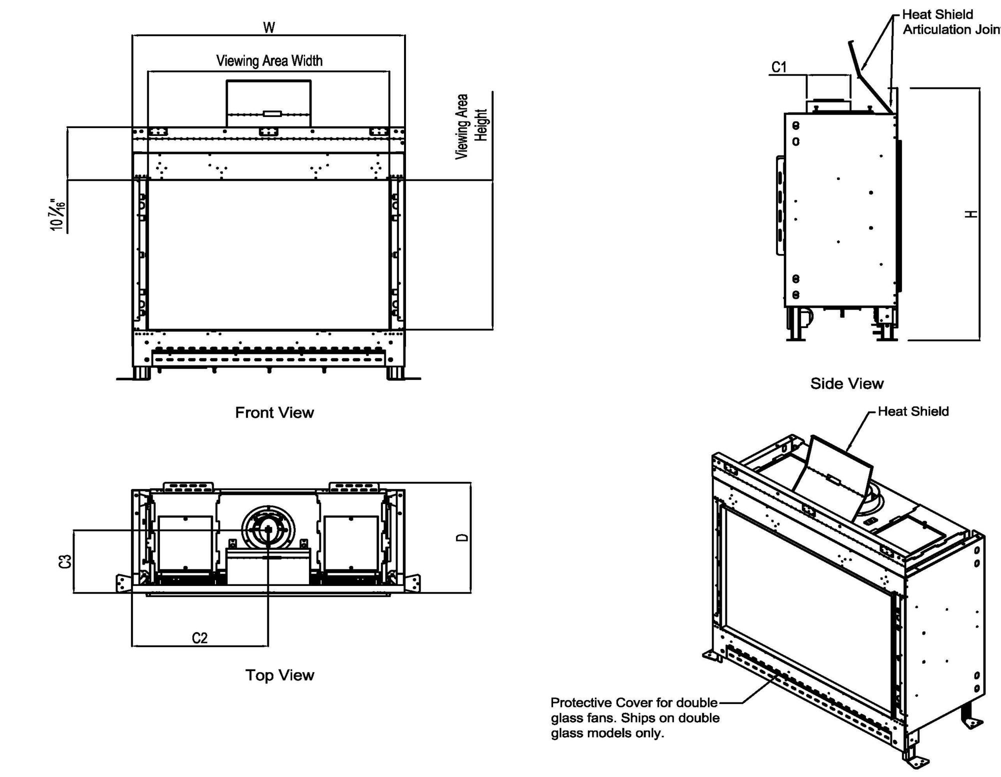

Model	(H) Height	(W) Width	(D) Depth	C1	C2	C3	Viewing Area	
							Front	Side
44HH Front	49 1/2"	48 15/16"	21 5/8"	7 7/8"	24 7/16"	12 5/16"	43 5/16" W X 29 1/2" H	—

Note : 1. Drawings are not to Scale
2. All dimensions in inches

Page 3 of 3

Framing Information: 44HH Front (Screen & Double Glass)

ORTAL
YOUR LIFE. YOUR FIRE

Framing Details

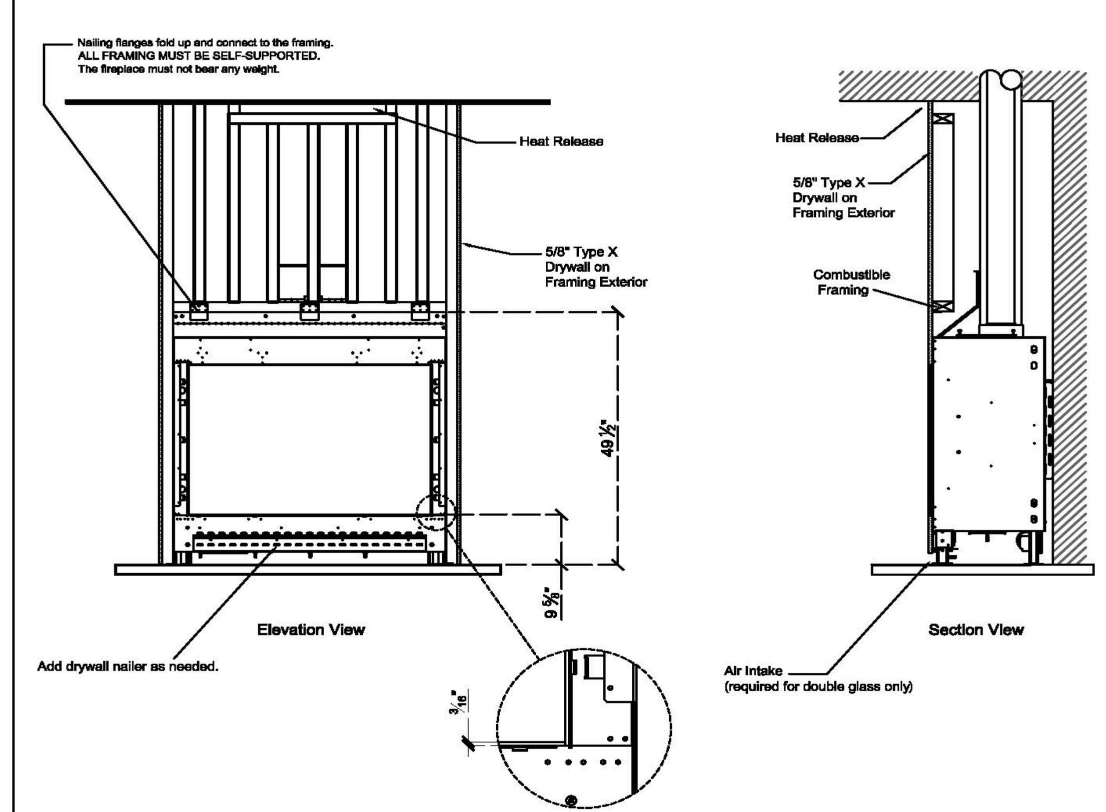

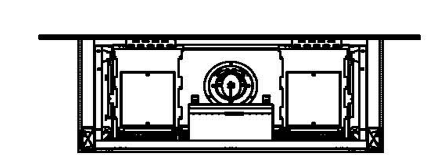

Top View

The valve can be moved 36" from the center of the fireplace in any direction

Note : 1. Drawings are not to Scale
2. All dimensions in inches
3. No weight can be transferred to the fireplace. ALL FRAMING MUST BE SELF-SUPPORTED.

Page 2 of 3

t: (415) 703-0904
e: info@apparatus.com
4450 18th Street
San Francisco, CA 94114
APPARATUS ARCHITECTURE

LICENSED ARCHITECT
STUART D. HILLS
No. C24966
Renew 9-30-2027
STATE OF CALIFORNIA

RESIDENTIAL ADDITION

1611 WILLOW AVE
BURLINGAME, CA 94010
PARCEL NUMBER 028142350

OWNER:
VEENA DUBAL
J RYAN GILFOIL

date	NOV 17, 2025
scale	3" = 1'-0"
revis	
2	REVISION JUN 01, 2026
3	REVISION JUN 18, 2026
4	REVISION JUN 18, 2026

A5.0

Installation and Operation Manual
Wilderness 44HH Series

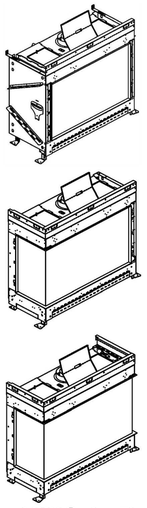

⚠WARNING:
FIRE OR EXPLOSION HAZARD
Failure to follow safety warnings exactly could result in serious injury, death, or property damage

- **DO NOT** store or use gasoline or other flammable vapors and liquids in the vicinity of this or any other appliance.
- **What to do if you smell gas:**
  - **DO NOT** try to light any appliance.
  - **DO NOT** touch any electrical switch. **DO NOT** use any phone in your building.
  - Leave the building immediately.
  - Immediately call your gas supplier from a neighbor's phone. Follow the gas supplier's instructions.
  - If you cannot reach your gas supplier, call the fire department.
- Installation and service must be performed by a qualified installer, service agency, or the gas supplier.

! DANGER

HOT GLASS WILL CAUSE BURNS.
DO NOT TOUCH GLASS UNTIL COOLED
NEVER ALLOW CHILDREN TO TOUCH GLASS.

A barrier designed to reduce the risk of burns from the hot viewing glass is provided with this appliance and must be installed for the protection of children and other at-risk individuals

C US

Wilderness 44HH Series Fireplaces:
Wilderness 44HH Front Facing
Wilderness 44HH Corner (RS/LS)
Wilderness 44HH Three Sided (TS)

The following diagrams are examples of potential heat release options. These drawings serve as illustrative purposes only.

Horizontal Heat Release
Note: The chase ceiling and the room ceiling are different reference points. The chase ceiling may be lower than, equal to, or higher than the room ceiling. The heat release must start within 6" of the chase ceiling. It cannot start lower than 6" from the chase ceiling.

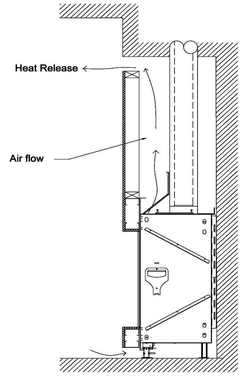

Reveal Heat Release

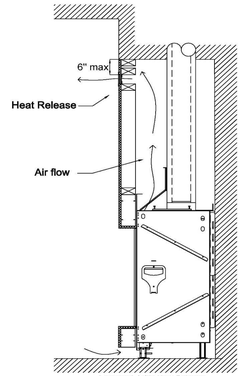

Louvered Grille Heat Release

Venting

General Venting Requirements
The fireplace operates using a direct vent system and requires co-axial direct vent pipe. The fireplace must be properly connected to an approved vent system. Venting is not provided with the fireplace and must be sourced from one of the approved vent manufacturers mentioned in the table below. Proper installation, use, and maintenance of venting is determined by and can be acquired from the vent manufacturer.

Vent Requirements			
Fireplace Model	**Direct Vent Type**	**Vent Size**	**Approved Vent Manufacturers**
Wilderness 44HH Front Wilderness 44HH RS Wilderness 44HH LS Wilderness 44HH TS	**Passive Vent (standard)**	5x8 co-axial direct vent pipe (5" interior, 8" exterior)	DuraVent: Direct Vent Pro ICC: EXCELDirect BDM: Pro-Form Direct Vent System Selkirk: Direct-Temp System
	Enervex RS Power Vent (optional)		
	Ortal Power Vent (optional)*	3x5 co-axial direct vent pipe (3" interior, 5" exterior)	DuraVent: CVS line ICC: EXCEL PV Pipe

***Power Vent: a fan-assisted direct vent system that boosts airflow for vent configurations with too much constriction. Review "Vent Configurations" section to determine if your fireplace needs a power vent.**

! ORTAL POWER VENT NOTE: See the Ortal Power Vent Manual for more details on power venting.

! ENERVEX POWER VENT NOTE: See Ortal's Enervex RS Power Vent Manual for more details on power venting with an Enervex power vent.

! TERMINATION CAP NOTE: Low Profile Termination Cap and Sconce Termination Cap can negatively impact flame appearance and are not recommended for use with the fireplace.

⚠ WARNING: Do not combine vent components from different vent manufacturers. Please follow the manufacturer's instructions for vent system installation.

Vent Configurations
The following sections provide information for calculating vent configuration distances and elbows. For vent configurations that cannot conform to these guidelines, consider Ortal's Power Vent System, or contact Ortal for assistance. Power Vent information can be found in the Power Vent Installation Manual.

Please consider the following guidelines when determining vent configuration:

Elbows

- **Maximum Elbows:** Up to **four** 90° elbows can be used in the vent configuration. Two 45° elbows = one 90° elbow.
  - **45º Vertical Offset Exception:** Two 45° elbows in the vertical plane with a diagonal run in between is equal to **0 elbows**. They are not counted with other elbows in the vent configuration. This offset exception is applicable immediately on the top of the fireplace and anywhere else within the vent configuration.
    The diagonal run between the two 45º elbows must be included when calculating vertical and horizontal distances.
  - **45º Horizontal Offset:** Two 45° elbows that begin and end in the horizontal plane, with a diagonal run in between, is equal to **one 90º elbow**. Additionally, **3 feet** must be reduced from the total allowable horizontal run.
    The diagonal run between the two 45º elbows must be included when calculating vertical and horizontal distances
- **Flat 90º Elbows:** For every flat 90° elbow (a 90° elbow that stays in the horizontal plane), **6 feet** must be reduced from the total allowable horizontal run. Up to two flat elbows are allowed.
  - Example: If max allowable horizontal run is 24 feet and 1 flat elbow is added, max run is reduced to 18 feet.
- **Exceeding two 90º Elbows:** For more than two 90° elbows, the minimum total vertical rise is **6 feet**..

Diagonal Runs

- **Calculating Diagonal Runs (D):** Diagonal (45°) vent runs have an equal combination of vertical and horizontal aspects. To include diagonal portions of your desired vent configuration when determining overall vent limitations, divide the diagonal distance in half. Add this value to the total vertical rise and total horizontal run distances in your vent configuration. Include these values when utilizing the Vent Configuration Tables below.
  - Example: 6 feet diagonal run = 3 feet vertical rise & 3 feet horizontal run

Other

Vent Termination
Horizontal Termination Clearance Diagram

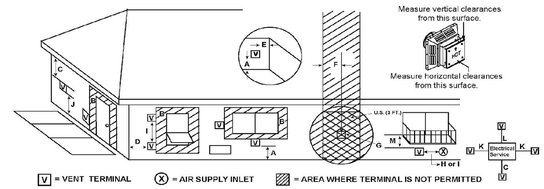

V = VENT TERMINAL X = AIR SUPPLY INLET = AREA WHERE TERMINAL IS NOT PERMITTED

Location	Country	Minimum Clearance	Description
A	US & Canada	12 inches	Clearance above grade, veranda, porch, deck, or balcony. NOTE: On private property where termination is less than 7 feet above a sidewalk, driveway, deck, porch, veranda, or balcony, use of a listed cap shield is suggested.
B	US	≤ 50,000 BTU: 9 inches > 50,000 BTU: 12 inches	Clearance to an operable window or door.
	Canada	12 inches	NOTE: Zero clearance to an inoperable window or door.
C	US & Canada	24 inches	Vertical clearance to a **ventilated** soffit located above the vent termination.
		18 inches	Vertical clearance to an **unventilated** soffit located above the vent termination.
		42 inches	Vertical clearance to vinyl clad soffits and below electrical service.
D	US & Canada	9 inches	Clearance to an outside corner.
E	US & Canada	6 inches	Clearance to an inside corner.
F	US	N/A	Not to be installed above a gas meter/regulator assembly within 3 feet (90 cm) horizontally from the center-line of the regulator.
	Canada	3 feet	
G	US & Canada	3 feet	Clearance to gas service regulator vent outlet.
H	US	9 inches	Clearance to a non-mechanical air supply inlet to the building or the combustion air inlet to any other appliance. NOTE: Termination in a covered alcove space (spaces open only on one side and with an overhang) are permitted with the dimensions specified for vinyl or non-vinyl siding and soffits. 1. There must be 3 feet minimum between termination caps. 2. All mechanical air intakes within 10 feet of a termination cap must be a minimum of 3 feet below the termination cap. 3. All gravity air intakes within 3 feet of a termination cap must be a minimum of 1 foot below the termination cap.
	Canada	12 inches	
I	US	3 feet	Clearance to a mechanical (powered) air supply inlet. NOTE: Termination in a covered alcove space (spaces open only on one side and with an overhang) are permitted with the dimensions specified for vinyl or non-vinyl siding and soffits. 1. There must be 3 feet minimum between termination caps. 2. All mechanical air intakes within 10 feet of a termination cap must be a minimum of 3 feet below the termination cap. 3. All gravity air intakes within 3 feet of a termination cap must be a minimum of 1 foot below the termination cap.
	Canada	6 feet	
J*	US & Canada	7 feet	Clearance above paved sidewalk or a paved driveway located on **public** property. NOTE: On private property where termination is less than 7 feet above a sidewalk, driveway, deck, porch, veranda, or balcony, use of a listed cap shield is suggested. *a vent shall not terminate directly above a sidewalk or paved driveway which is located between two single family dwellings and serves both dwellings.
K	US & Canada	6 inches	Clearance from sides of electrical service. NOTE: Location of the vent termination must not interfere with access to the electrical service.
L	US & Canada	12 inches	Clearance above electrical service. NOTE: Location of the vent termination must not interfere with access to the electrical service.

Framing Dimensions
The following framing information applies to combustible and non-combustible framing material. The diagrams presented are for illustrative purposes only. There are multiple approved framing scenarios. A flush application is not the only permitted application. The fireplace may be recessed into the wall. Refer to diagrams and values below and in the following pages for details.

**When constructing the framing for the fireplace, please add up to +.25" variance to each side, and the top, of the fireplace frame. This added variance will allow added space to maneuver and adjust the fireplace when setting it in the chase.

Wilderness 44HH Front (F) Series

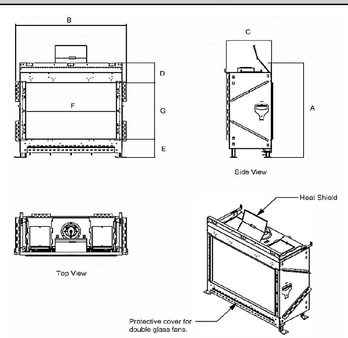

Fireplace	A: Height	B: Length	C: Depth	D: Stand-Off	E: Legs	F: Glass Length	G: Glass Height
44HH F	49 1/2"	52 15/16"	21 5/8"	10 7/16"	9 5/8"	43 5/16"	29 1/2"

Framing	
Fireplace	**44HH F**
A: Height	49 1/2"
B: Length	52 15/16"
C: Depth	21 5/8"
V: Firestop	Refer to pipe manufacturer's firestop dimensions

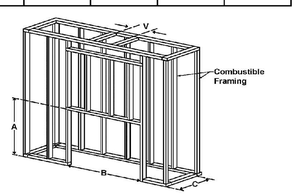

Flush Installation
Diagram applies to both combustible and non-combustible finish material.

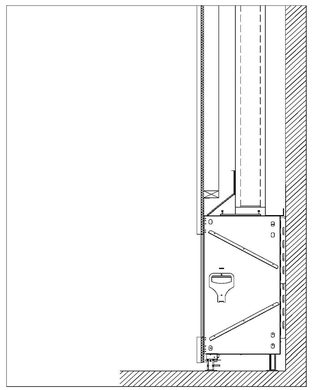

- **V Minimum**: This is the minimum amount of vertical rise required before the first *completely* horizontal (not diagonal) run.
- Any vent configuration that does not meet these parameters requires Ortal's review and approval.

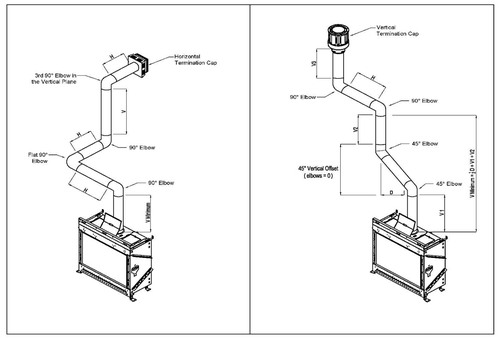

Allowable Maximum Horizontal Runs

Wilderness 44HH Series (Driftwood 70-3 Burner)	
V minimum = 3 feet	
Vertical (V)	Max Horizontal (H)
3 ft	7 ft
6 ft	12 ft
9 ft	18 ft
12 ft	21 ft
15 ft	21 ft
18 ft	18 ft
21 ft	18 ft
24 ft	18 ft
27 ft	12 ft
30 ft	12 ft
33 ft	12 ft
36 ft	6 ft
44 ft	0 ft

! CHART NOTE: Do not include the space elbows take up when calculating your vertical and horizontal distances.

t: (415) 703-9504
e: info@apparatus.com

4459 19th Street
San Francisco, CA 94114

APPARATUS ARCHITECTURE

LICENSED ARCHITECT
STUART D. HILLS
No. C24966
Renew 9-30-2027
STATE OF CALIFORNIA

RESIDENTIAL ADDITION
1611 WILLOW AVE
BURLINGAME, CA 94010
PARCEL NUMBER 028142350

OWNER:
VEENA DUBAL
J RYAN GILFOIL

date	NOV 17, 2025
scale	3" = 1'-0"
revis	
2	REVISION JUN 01, 2026
3	REVISION JUN 18, 2026
4	REVISION JUN 18, 2026

A5.1